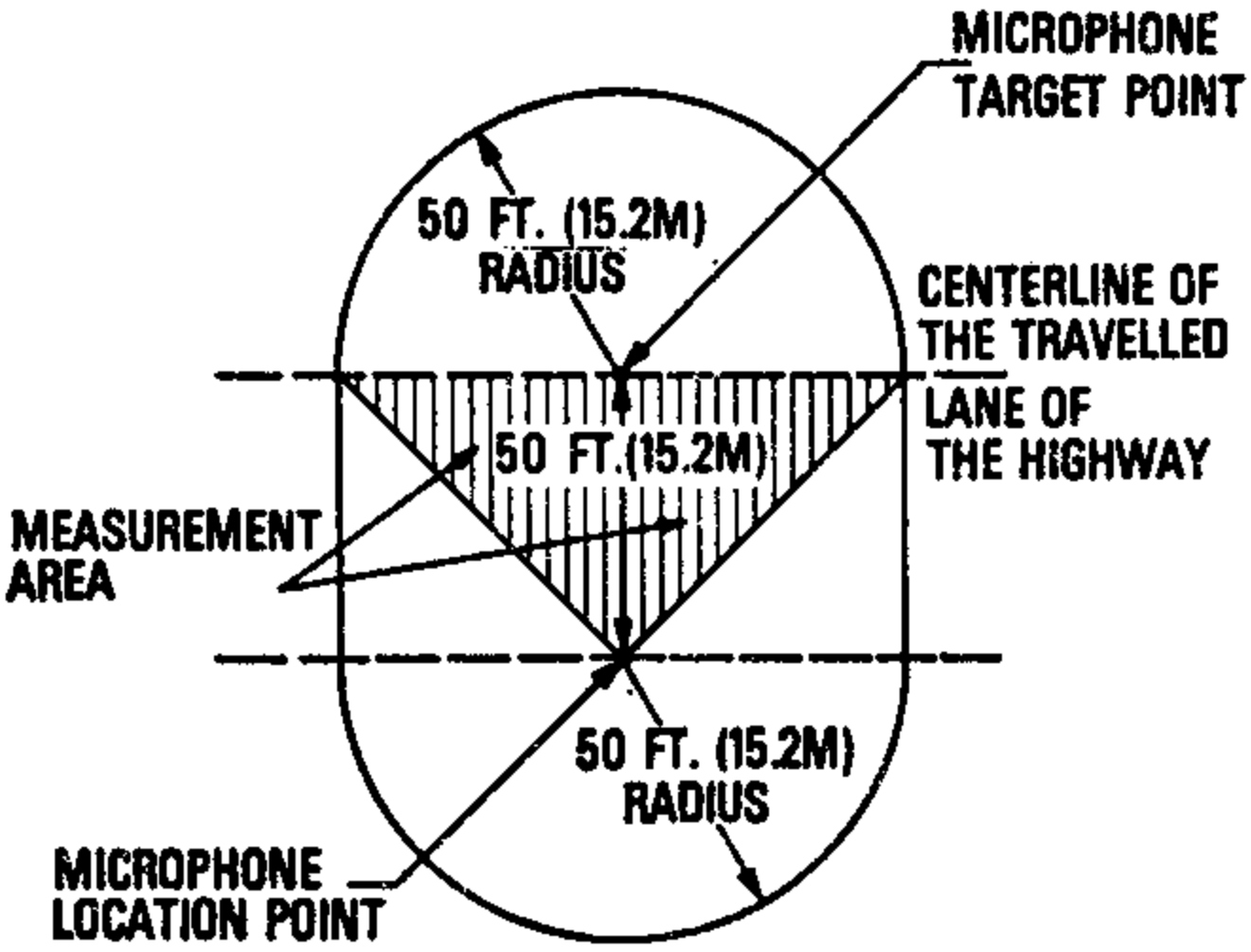

Figure 1
STANDARD TEST SITE;
HIGHWAY OPERATIONS