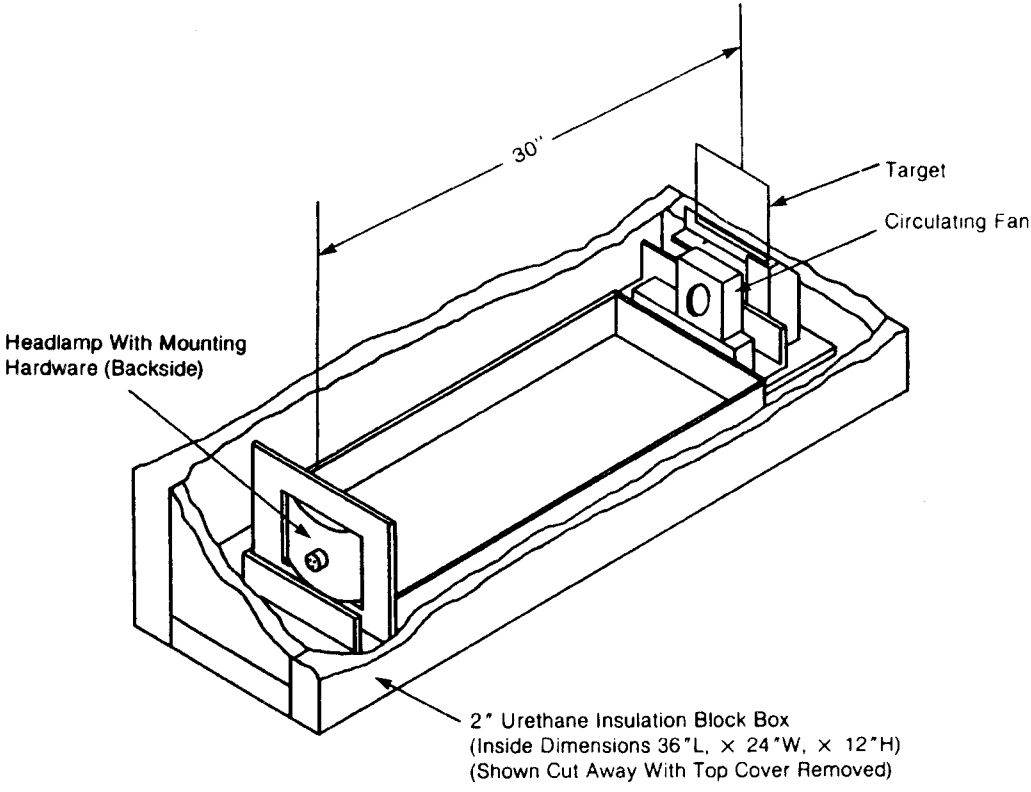

Figure 7. Dirt/Ambient Test Setup