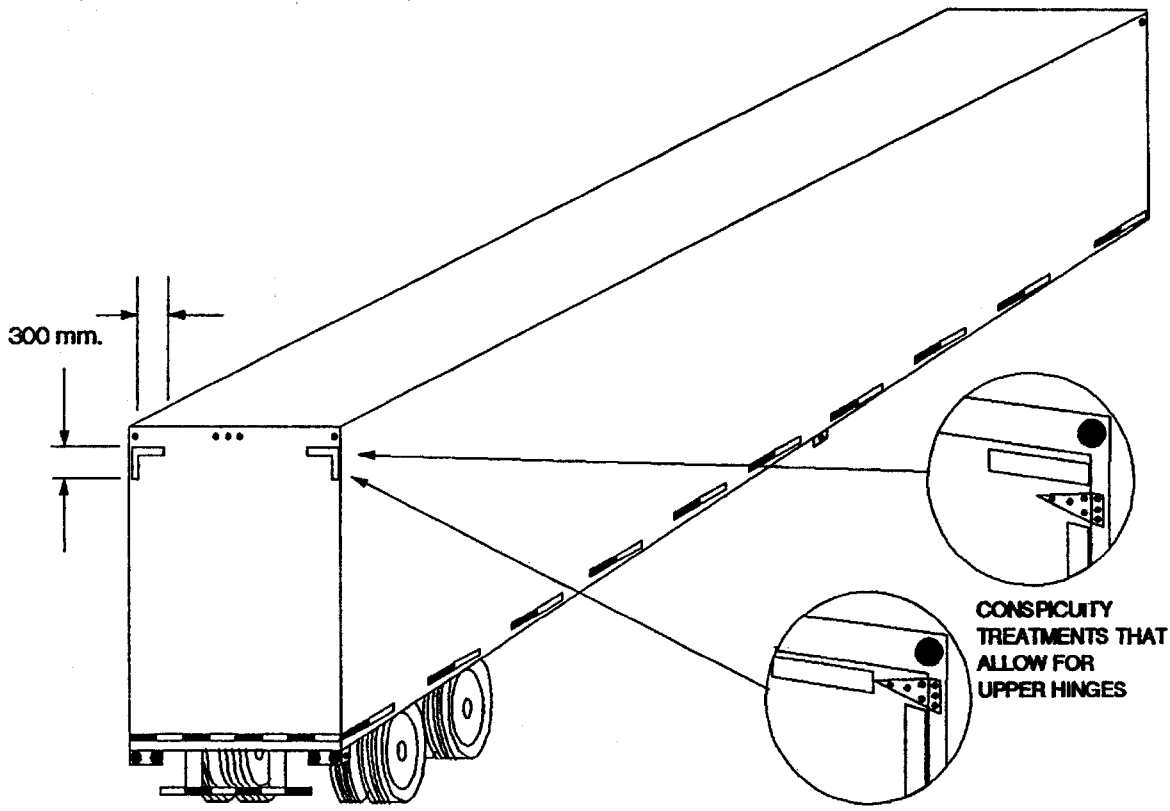

Figure 30-1
Trailer Conspicuity Treatment Example