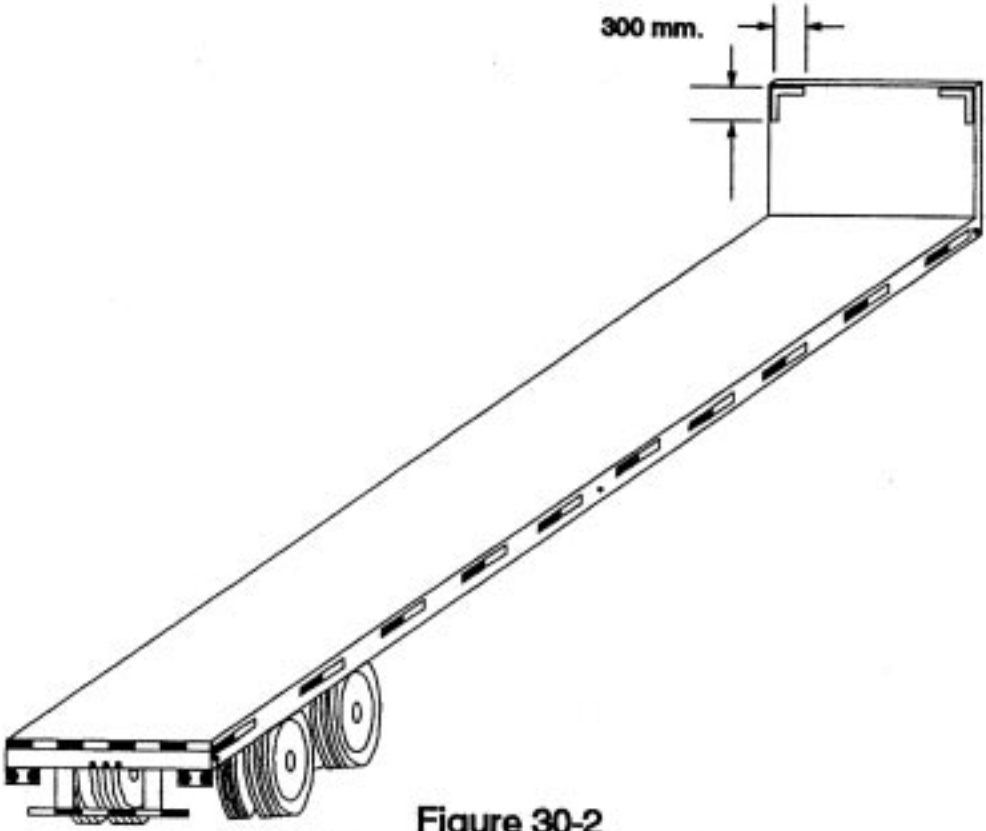

Figure 30-2
Trailer Conspicuity Treatment Example