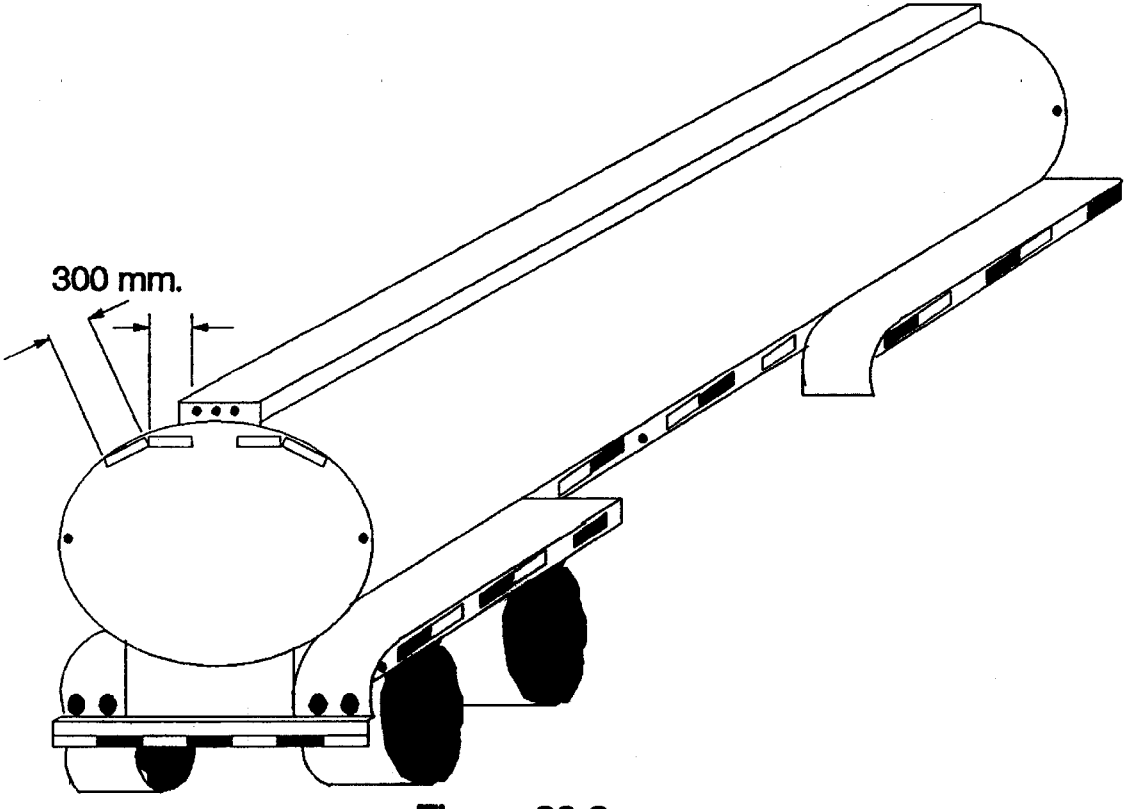

Figure 30-3

Trailer Conspicuity Treatment Example