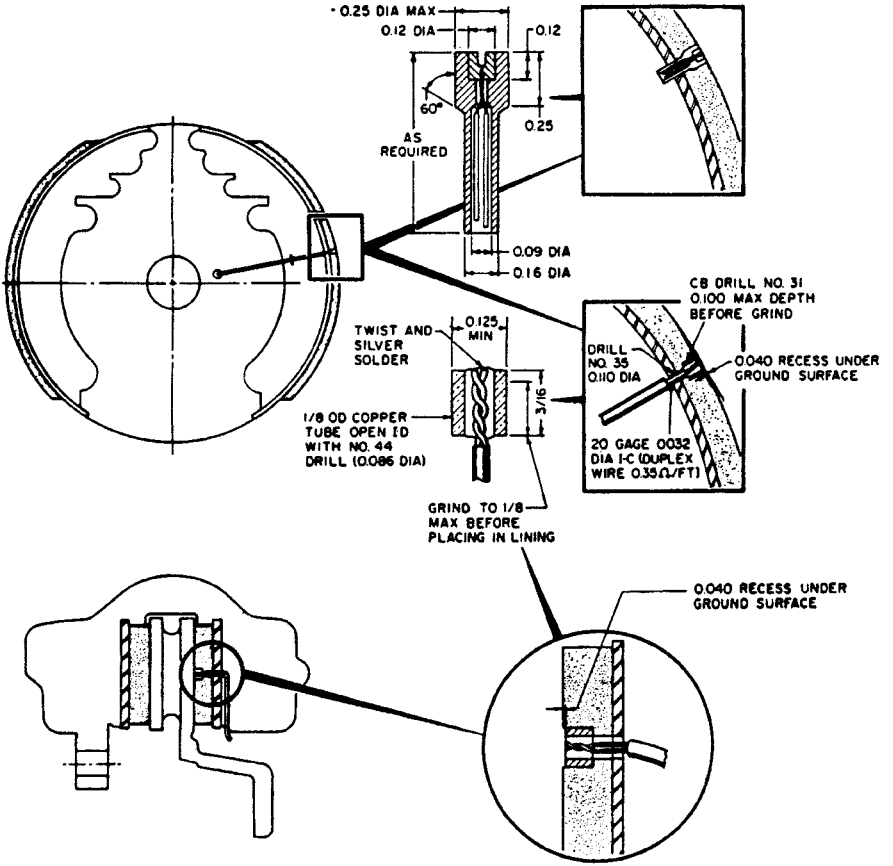FIGURE 2
THERMOCOUPLE INSTALLATION