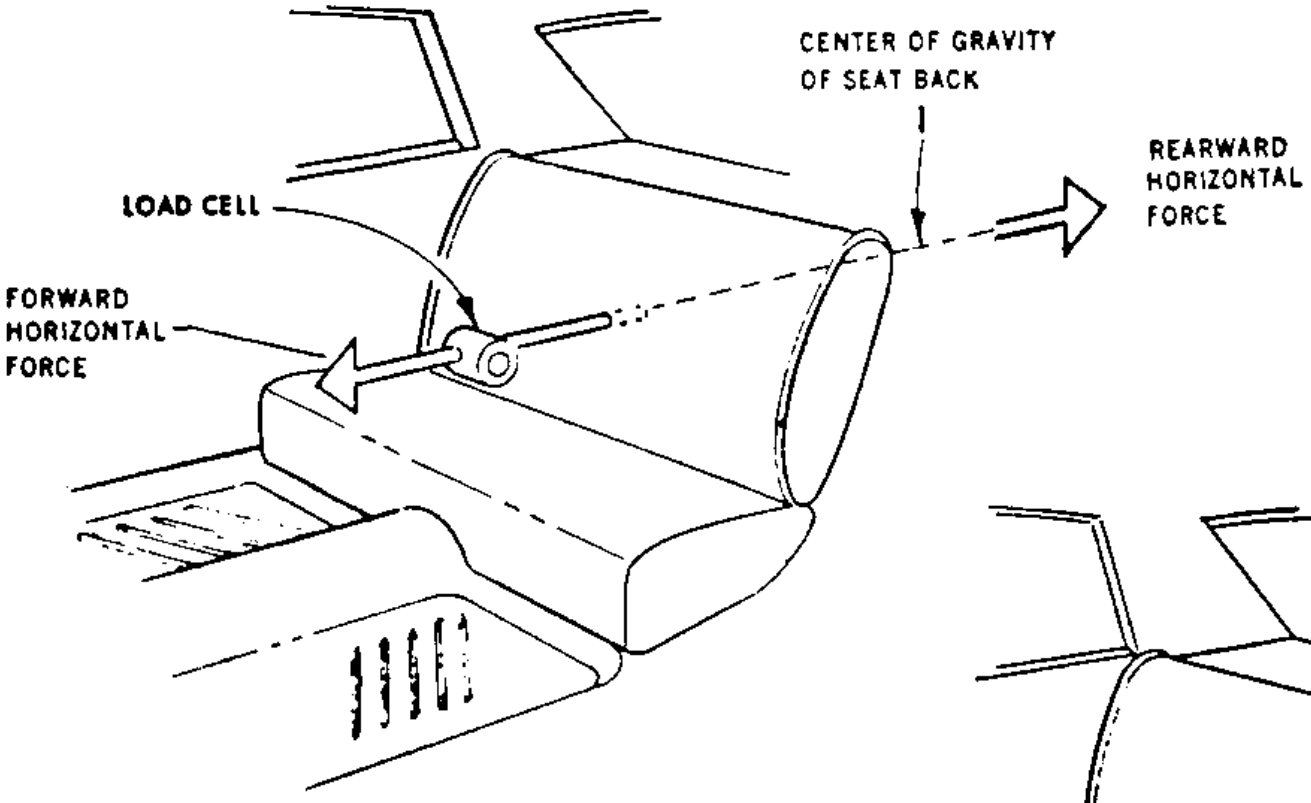

FIGURE 2

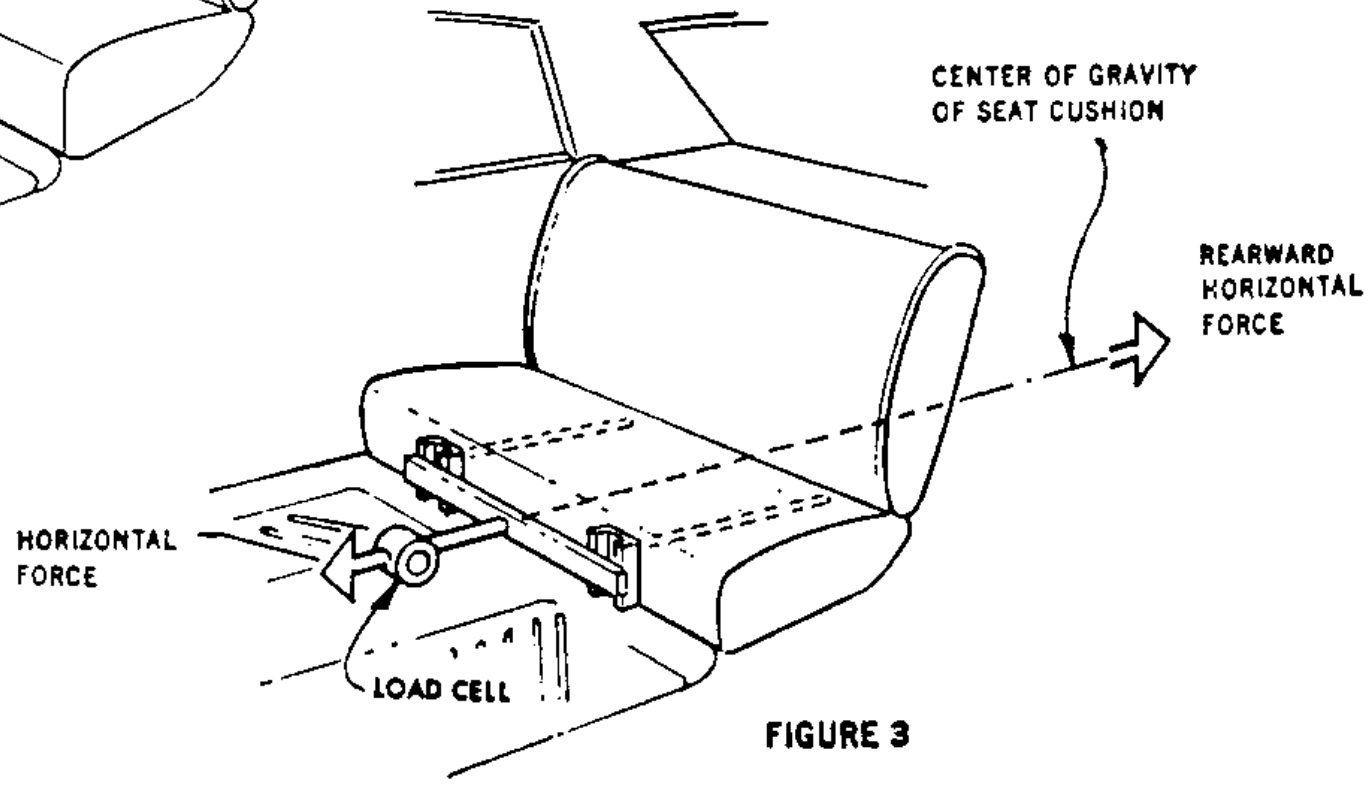

FIGURE 3