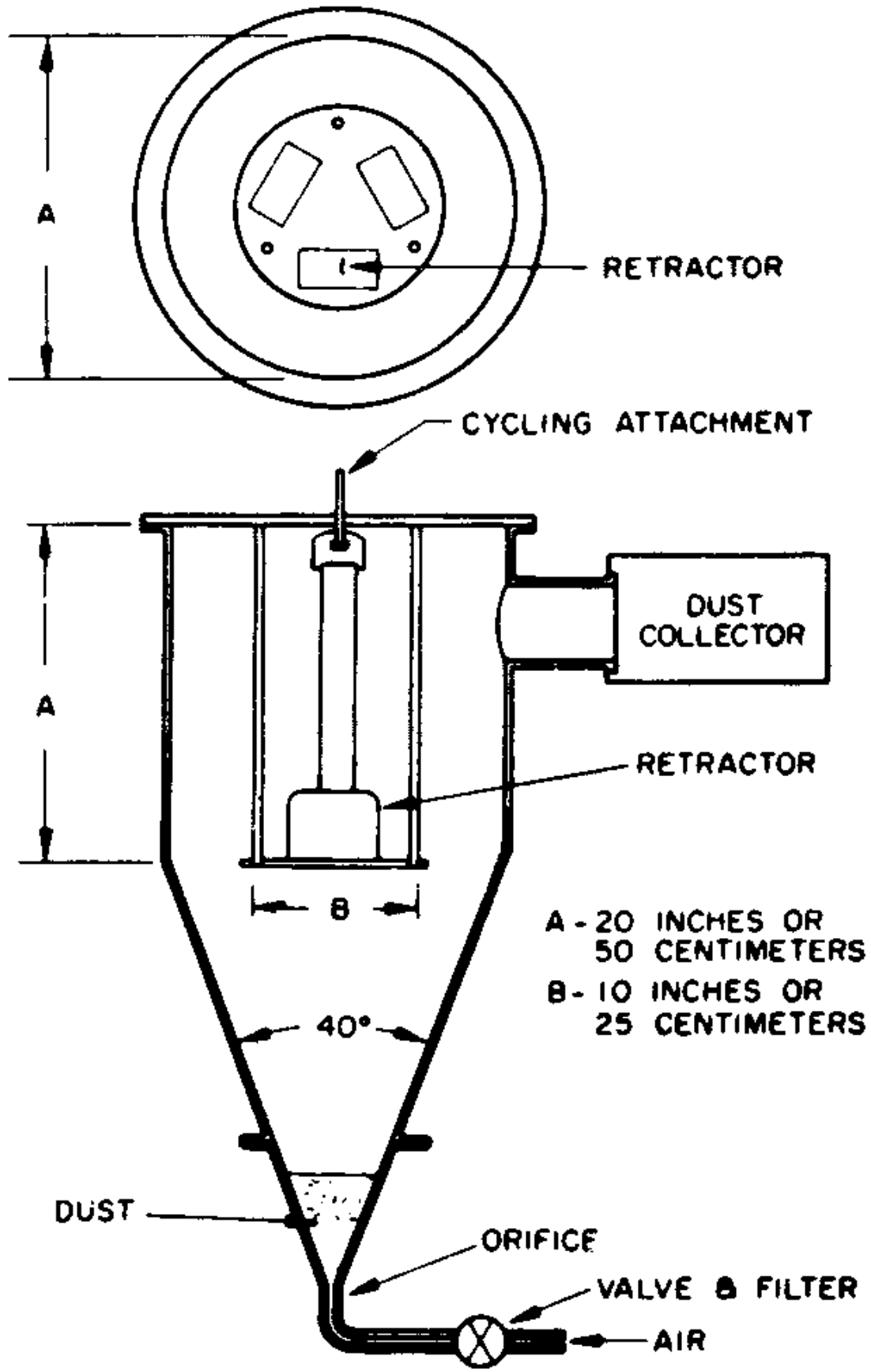

FIGURE 6

[34 F.R. 115
January 4, 1969]