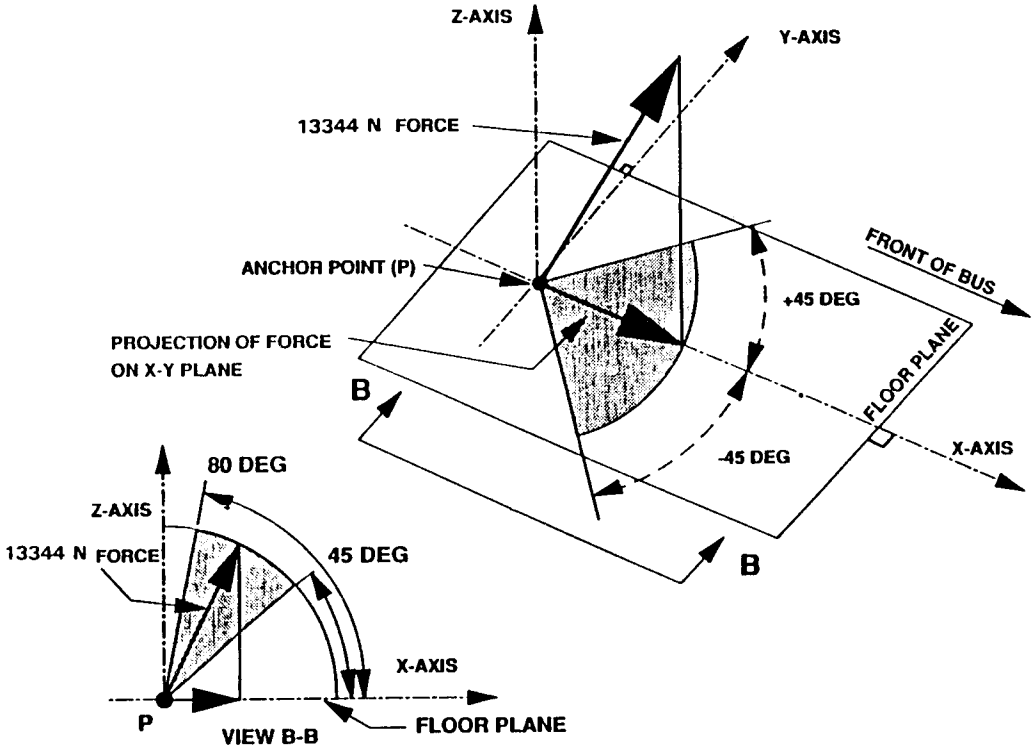

Figure 5. Pelvic Restraint Anchorage Loading Direction