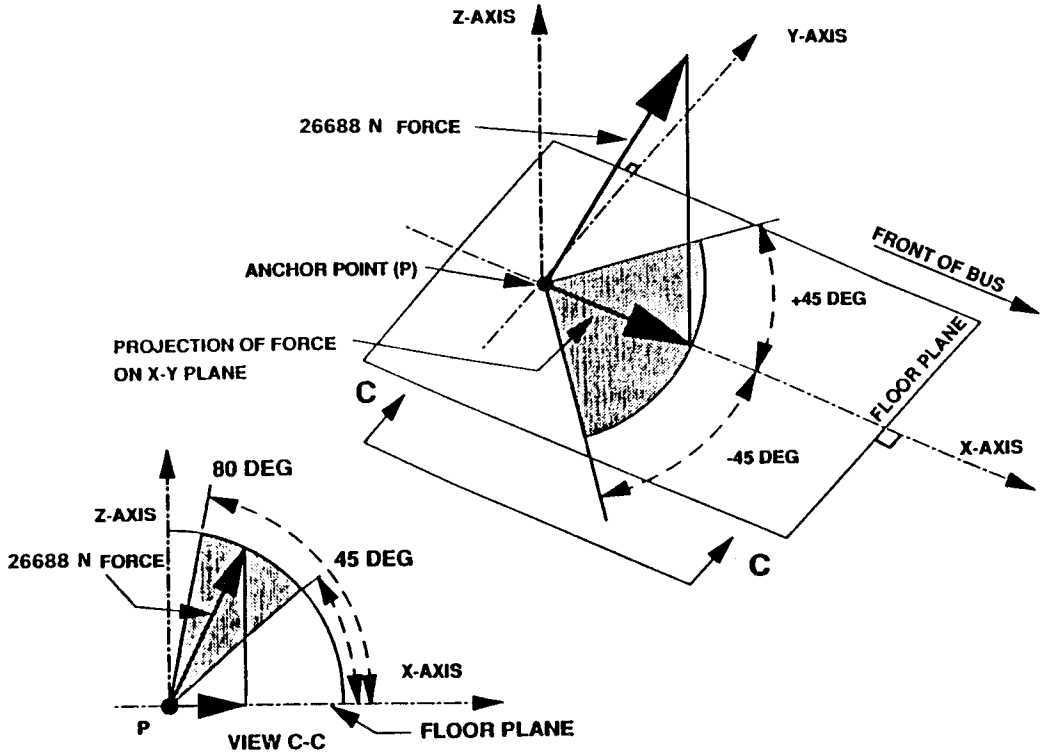

Figure 6. Pelvic Restraint and Wheelchair Securement Common Anchorage Loading Direction (Rear Direction Only)