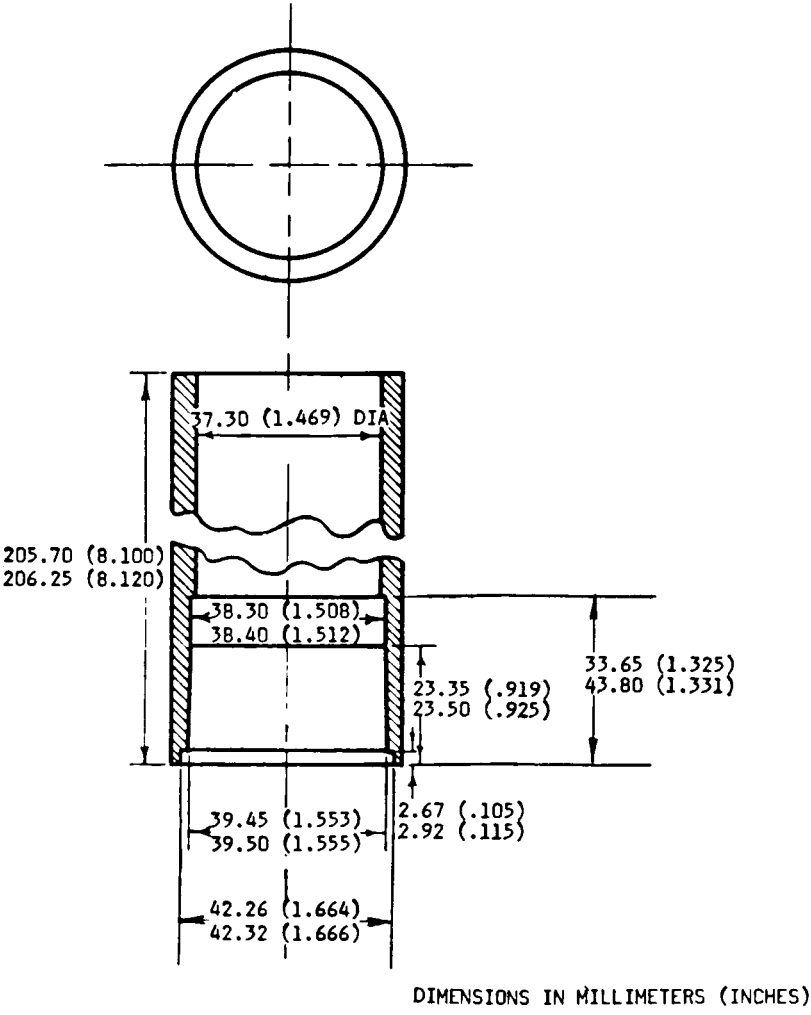

Figure 160.028-2(a). Signal Pistol - Chamber and Bore Dimensions.