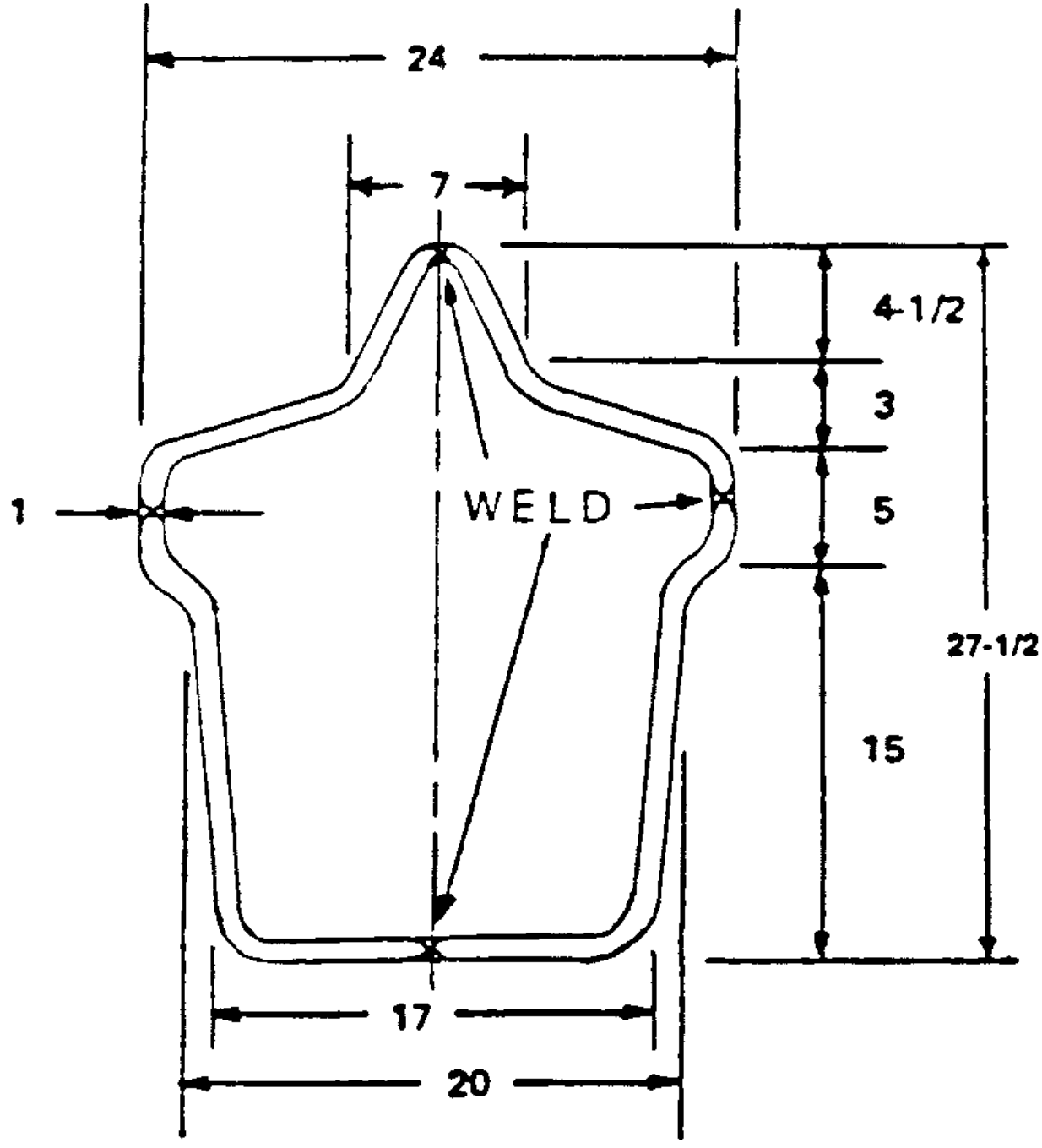

Dimensions are in inches. Form fabricated from 1 inch diameter mild steel rod. All bend radii 1-1/2 inches.

Figure 160.176-13(n)(2) Test Form