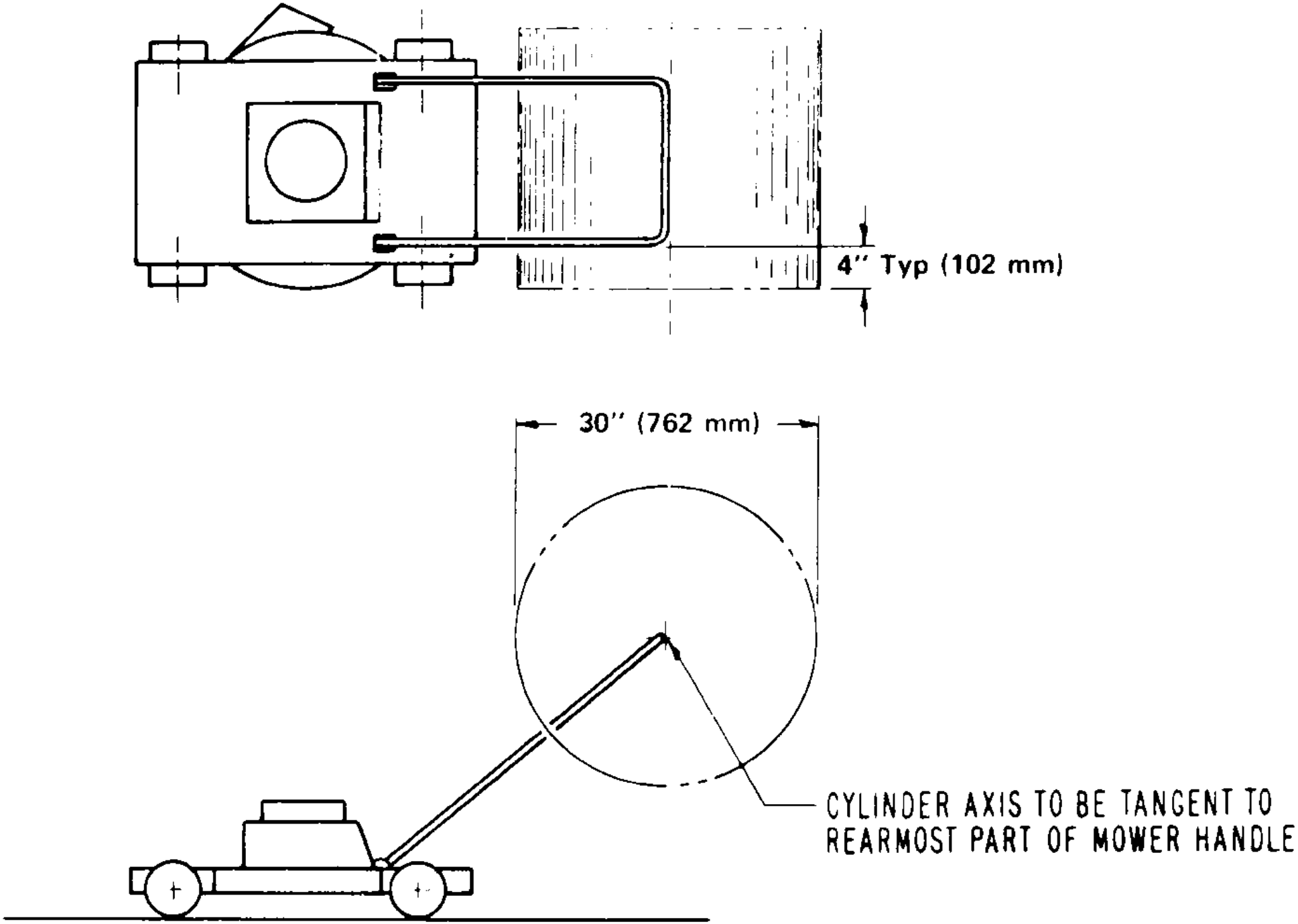

FIGURE 1 – OPERATING CONTROL ZONE