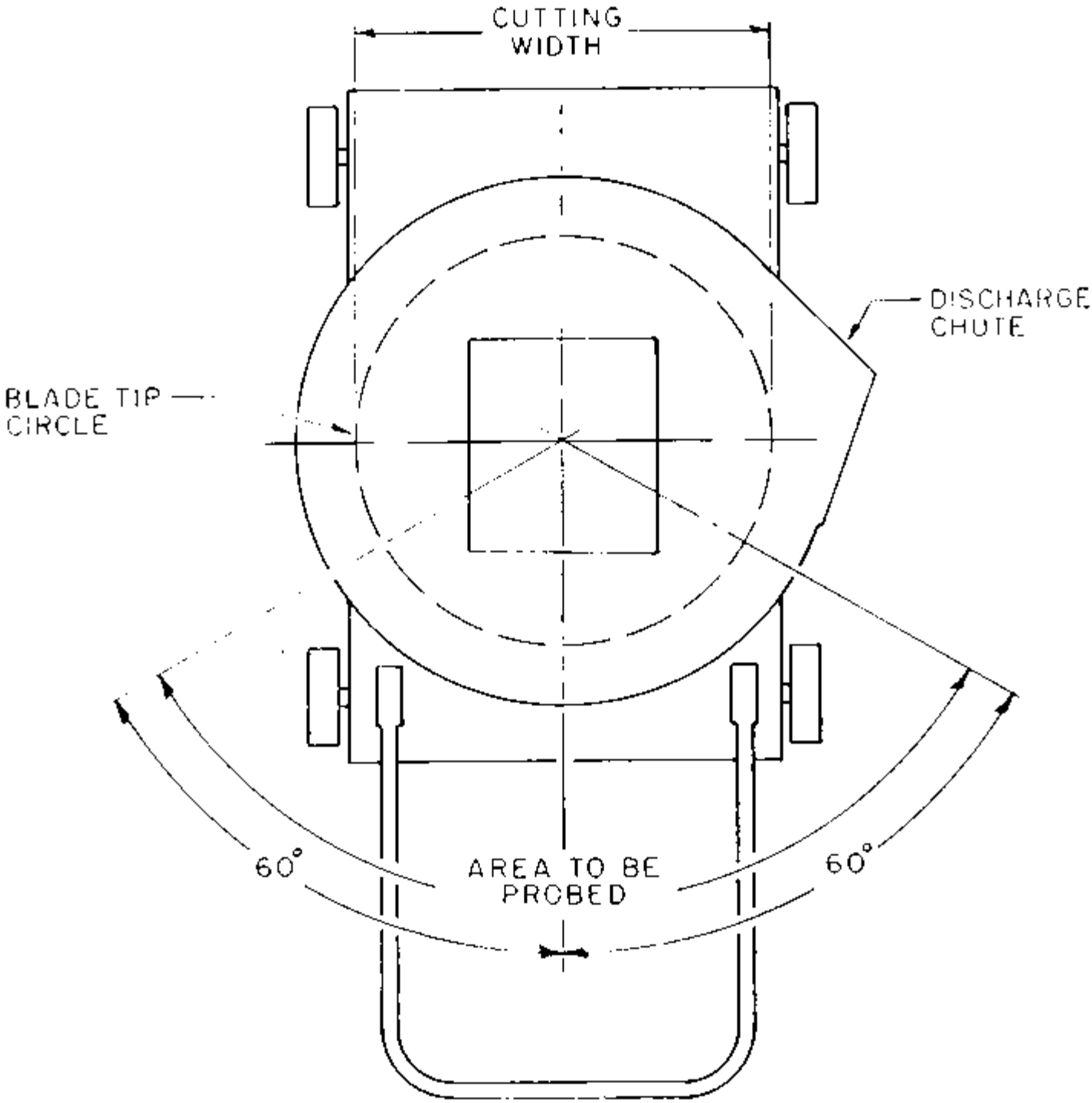

FIGURE 3 - AREA TO BE PROBED