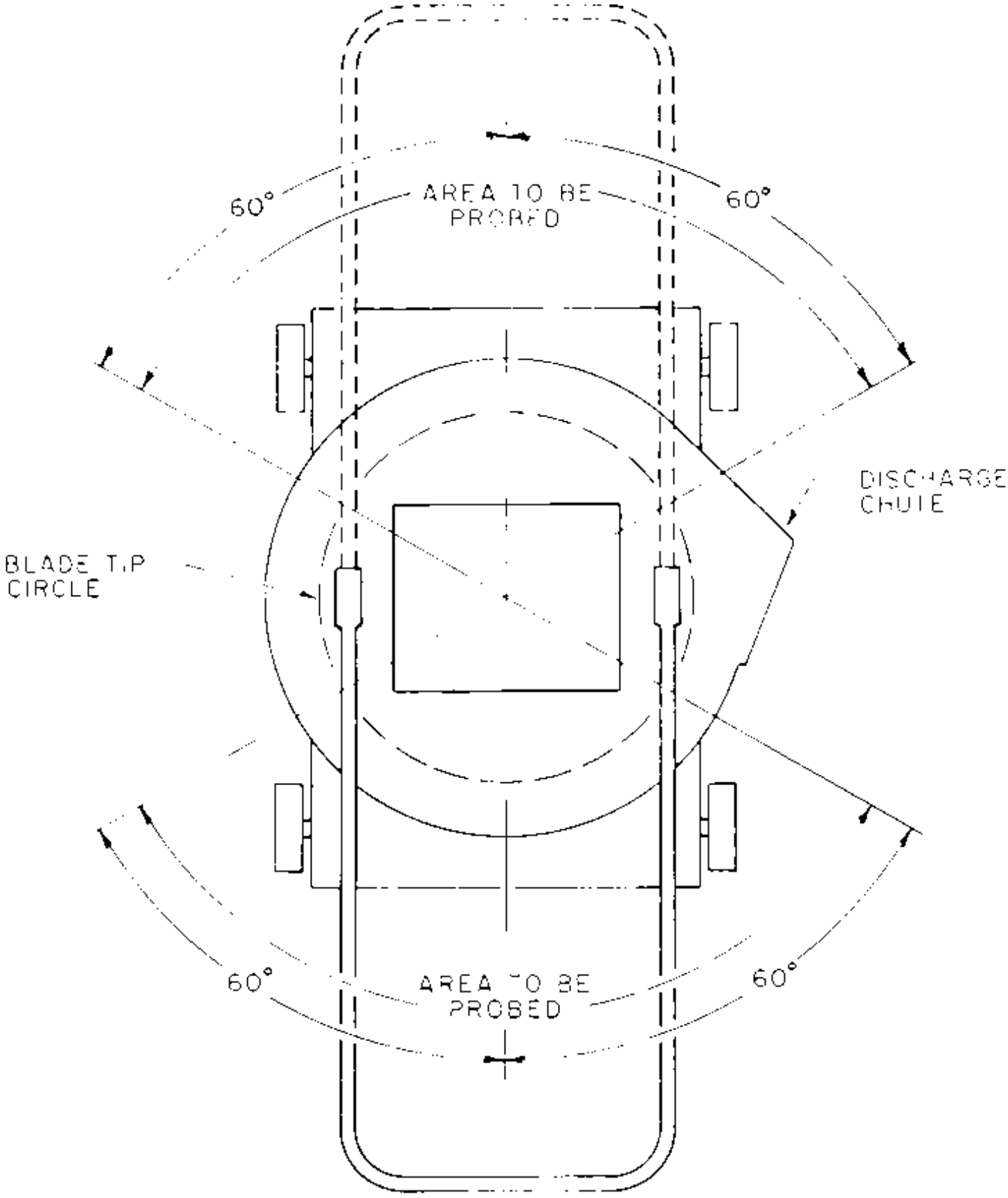

FIGURE 5 - AREA TO BE PROBED SWINGOVER HANDLE