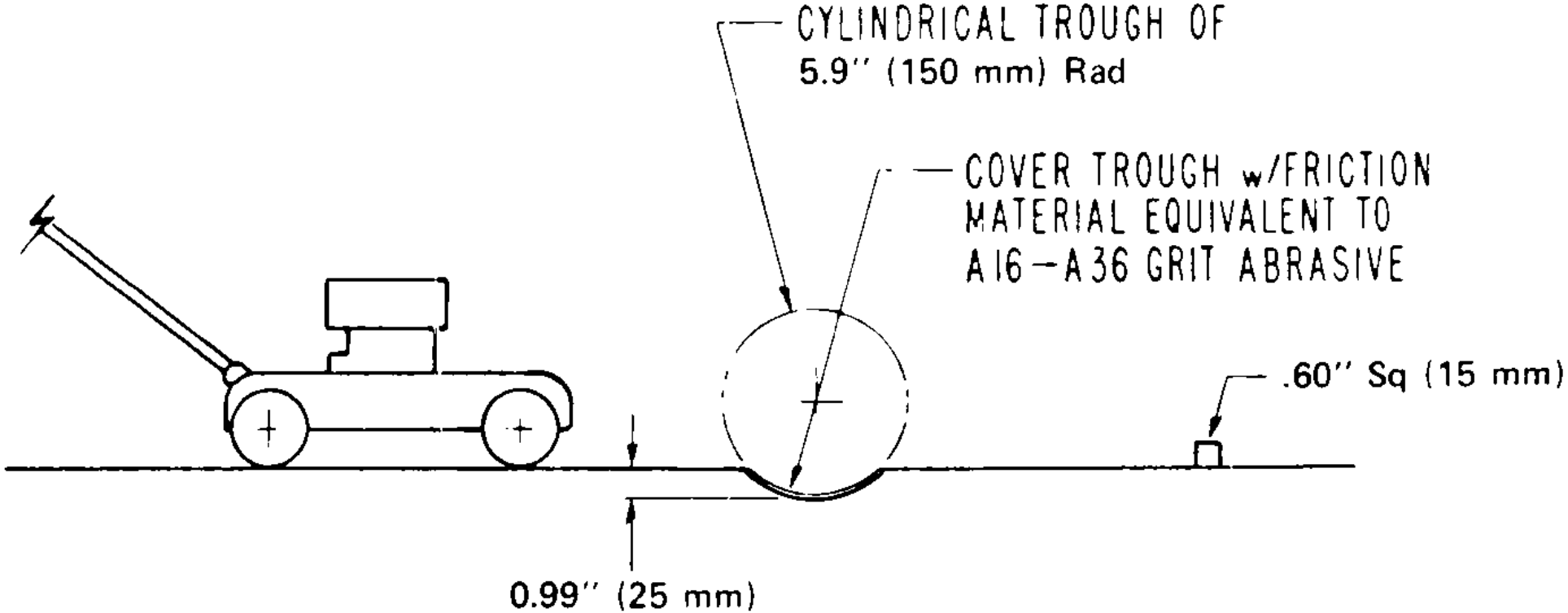

FIGURE 6 – OBSTRUCTION TEST FIXTURE