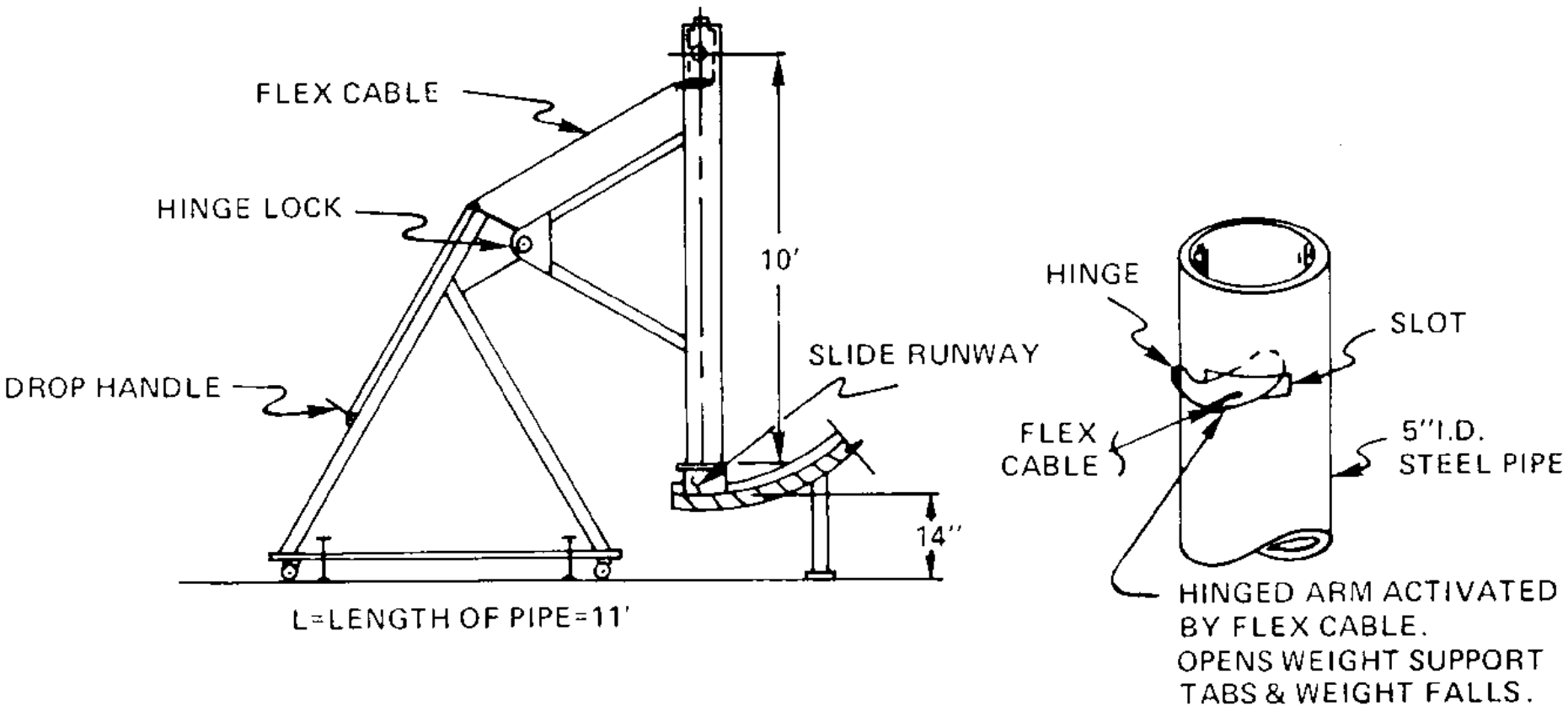FIG. L
DYNAMIC LOAD TEST