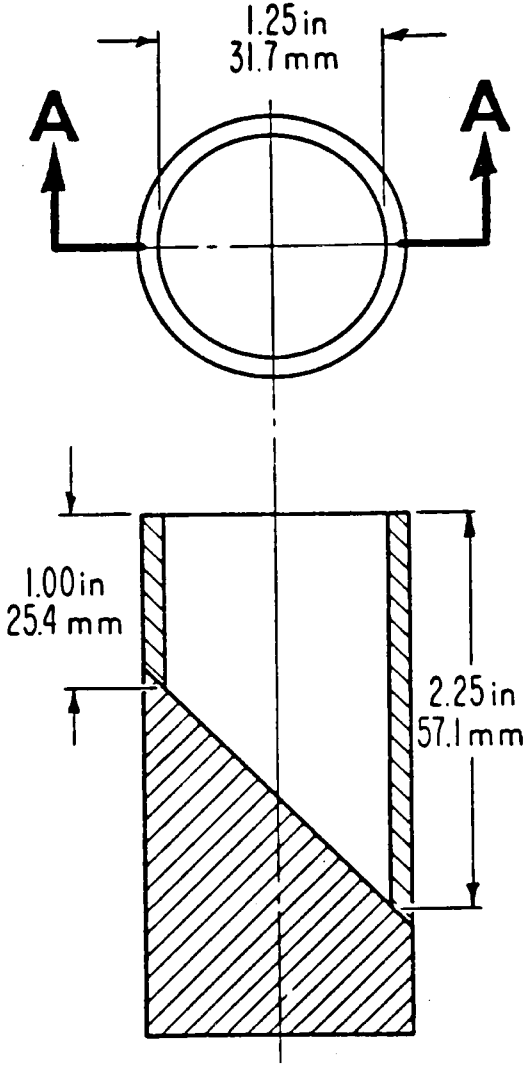

Section A-A

FIG 1 - SMALL PARTS CYLINDER