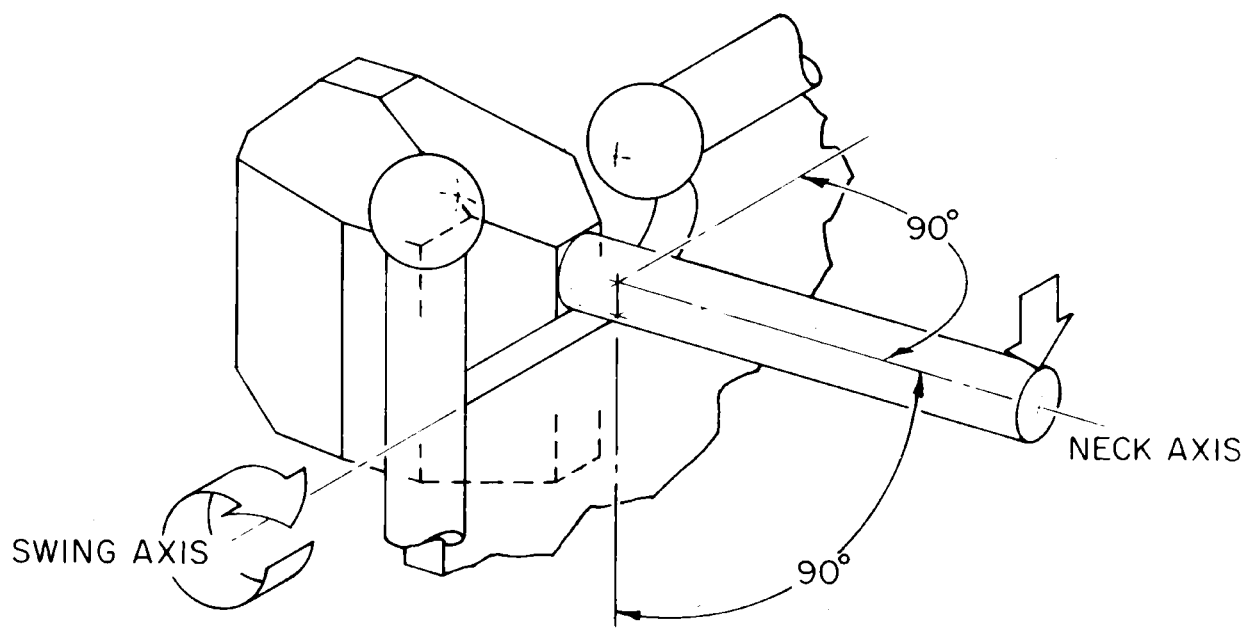

FIG 3