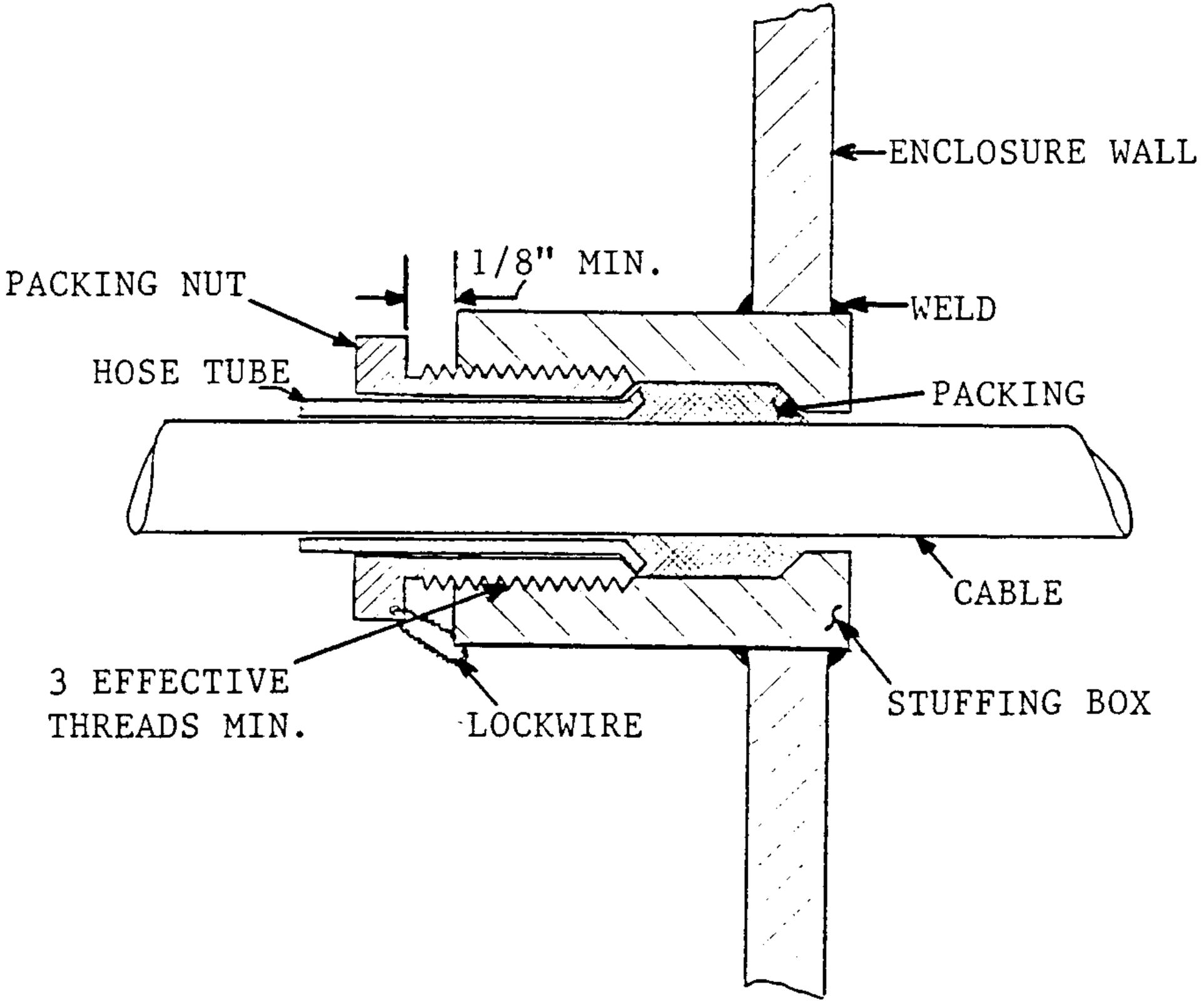
ENCLOSURE WALL
1/8" MIN.
PACKING NUT
WELD
HOSE TUBE
PACKING
CABLE
3 EFFECTIVE
THREADS MIN.
LOCKWIRE
STUFFING BOX

FIGURE J-10