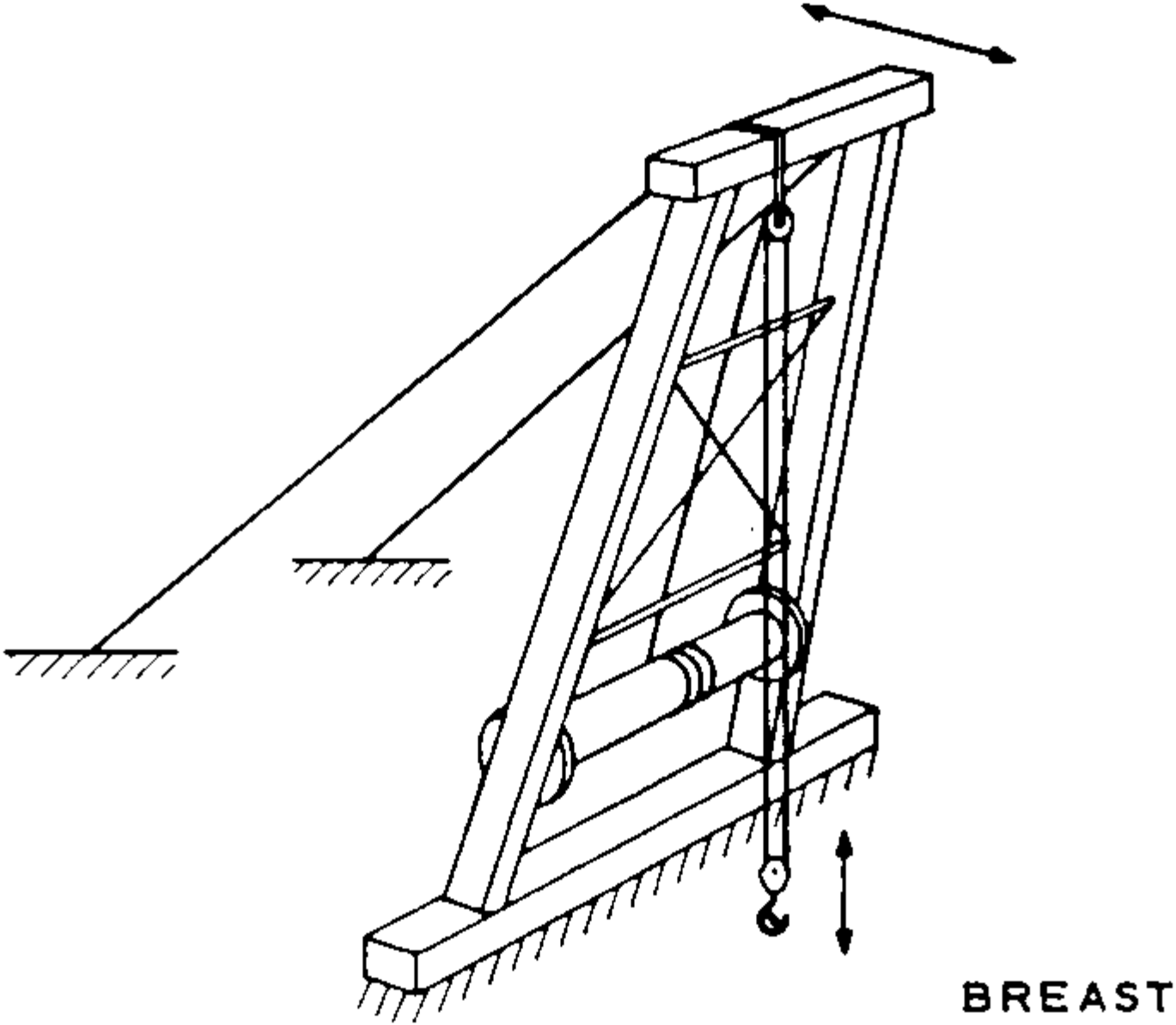
BREAST