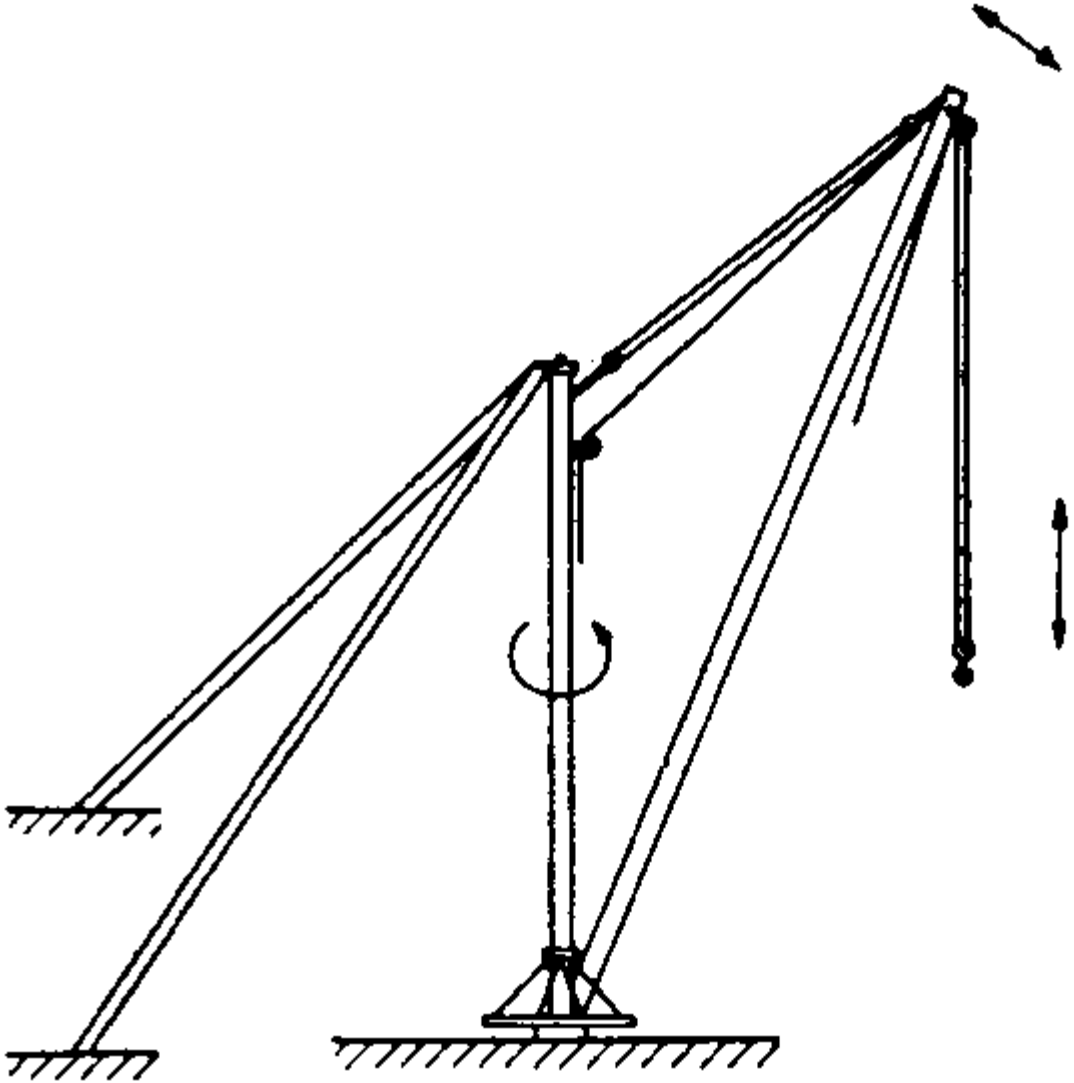

STIFF LEG