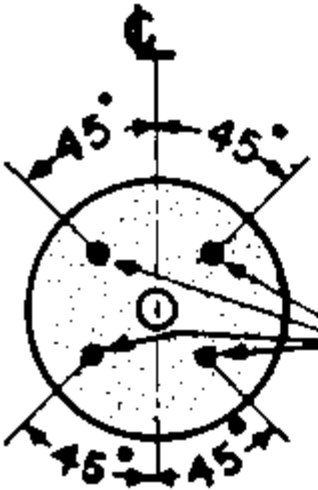

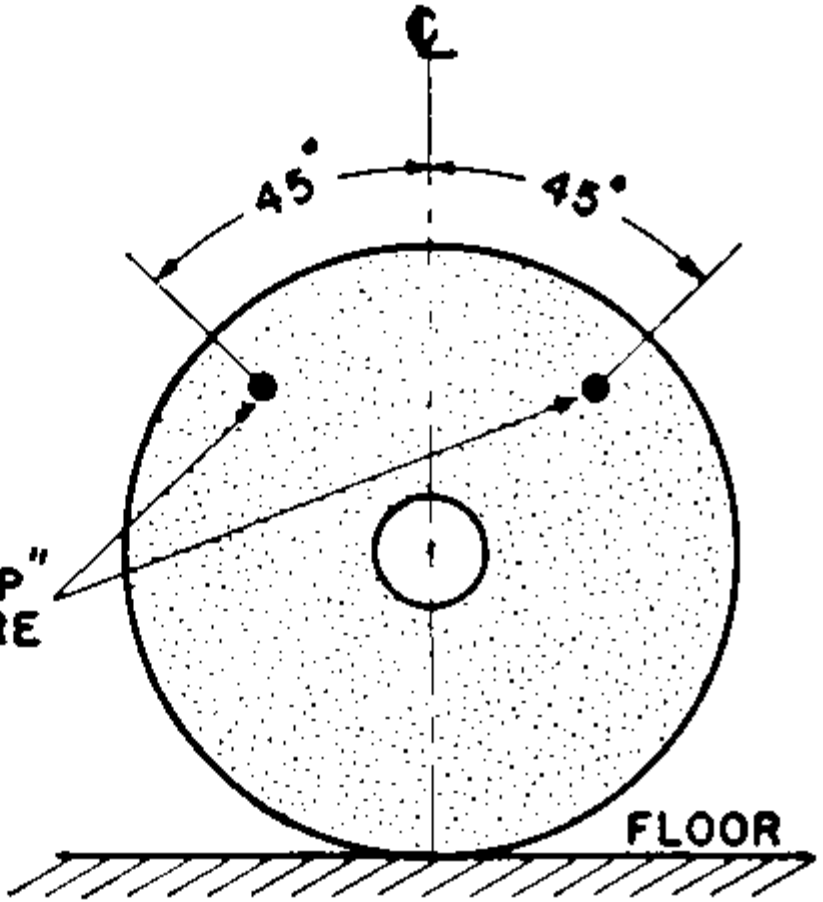

Light Wheels
Suspend from hole by small pin or finger

Heavy Wheels
Support on clean hard floor