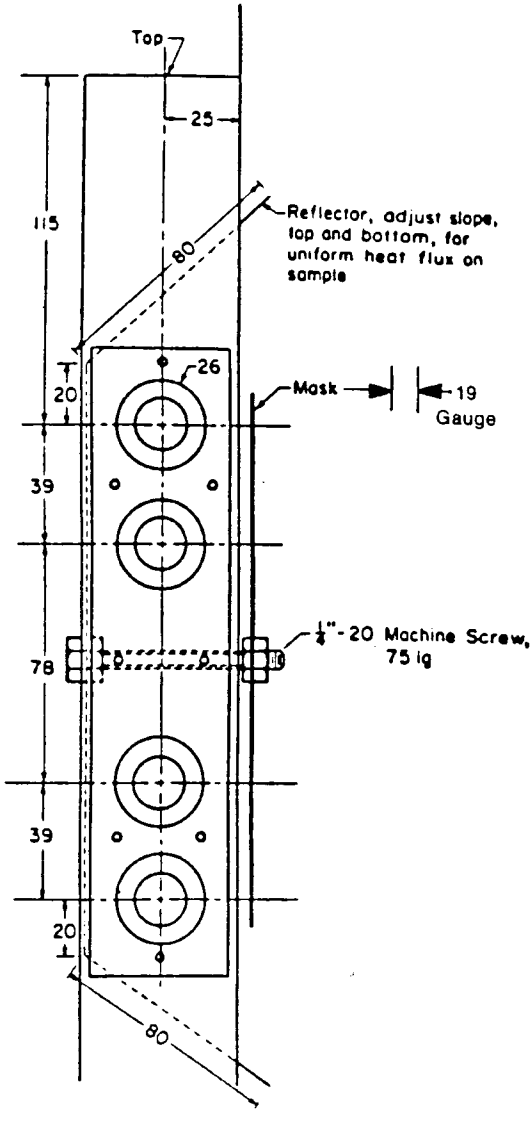

(Unless denoted otherwise all dimensions are in millimeters.)

Figure 2B. "Globar" Radiant Panel