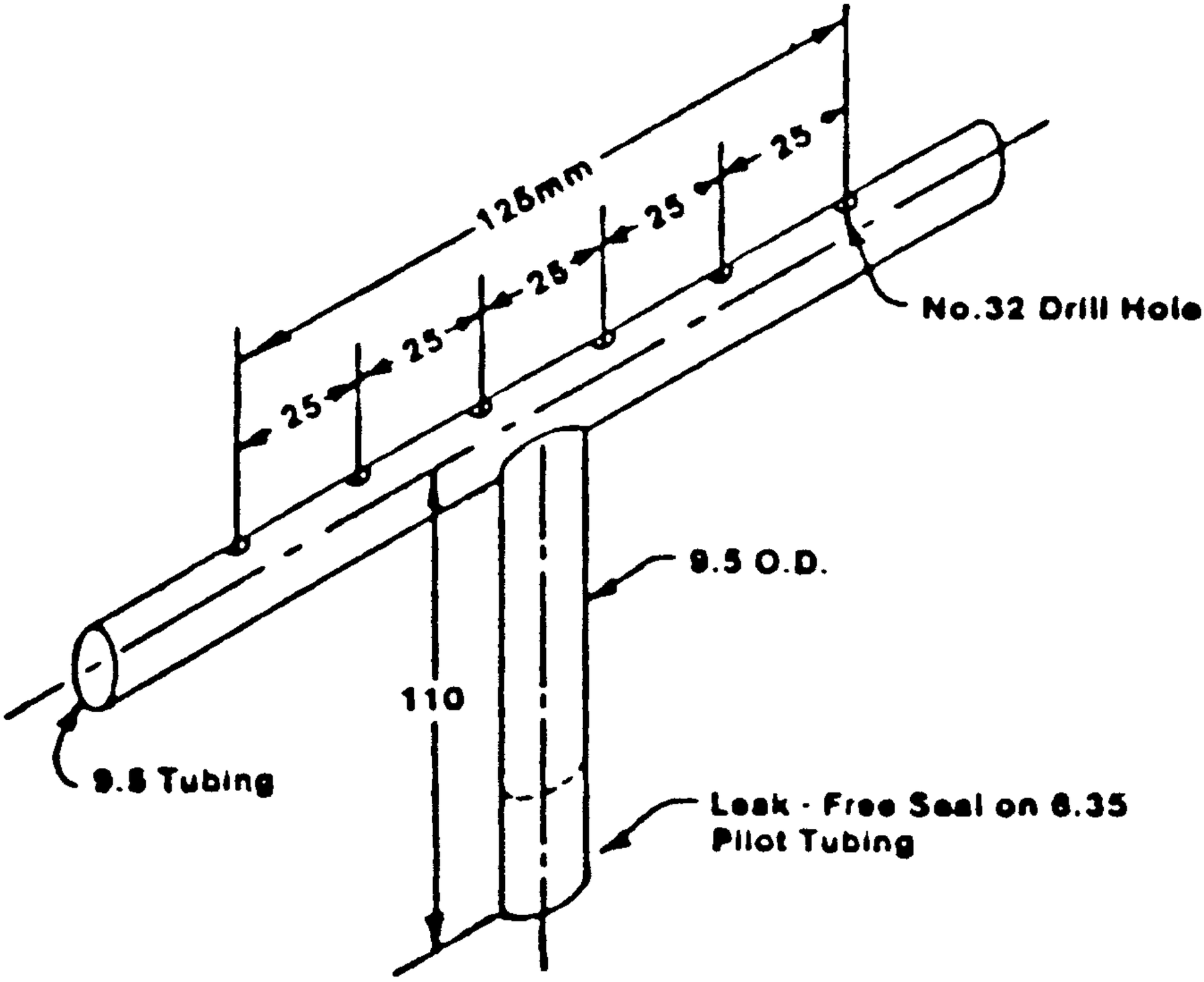

(Unless denoted otherwise, all dimensions are in millimeters.)

Figure 4.