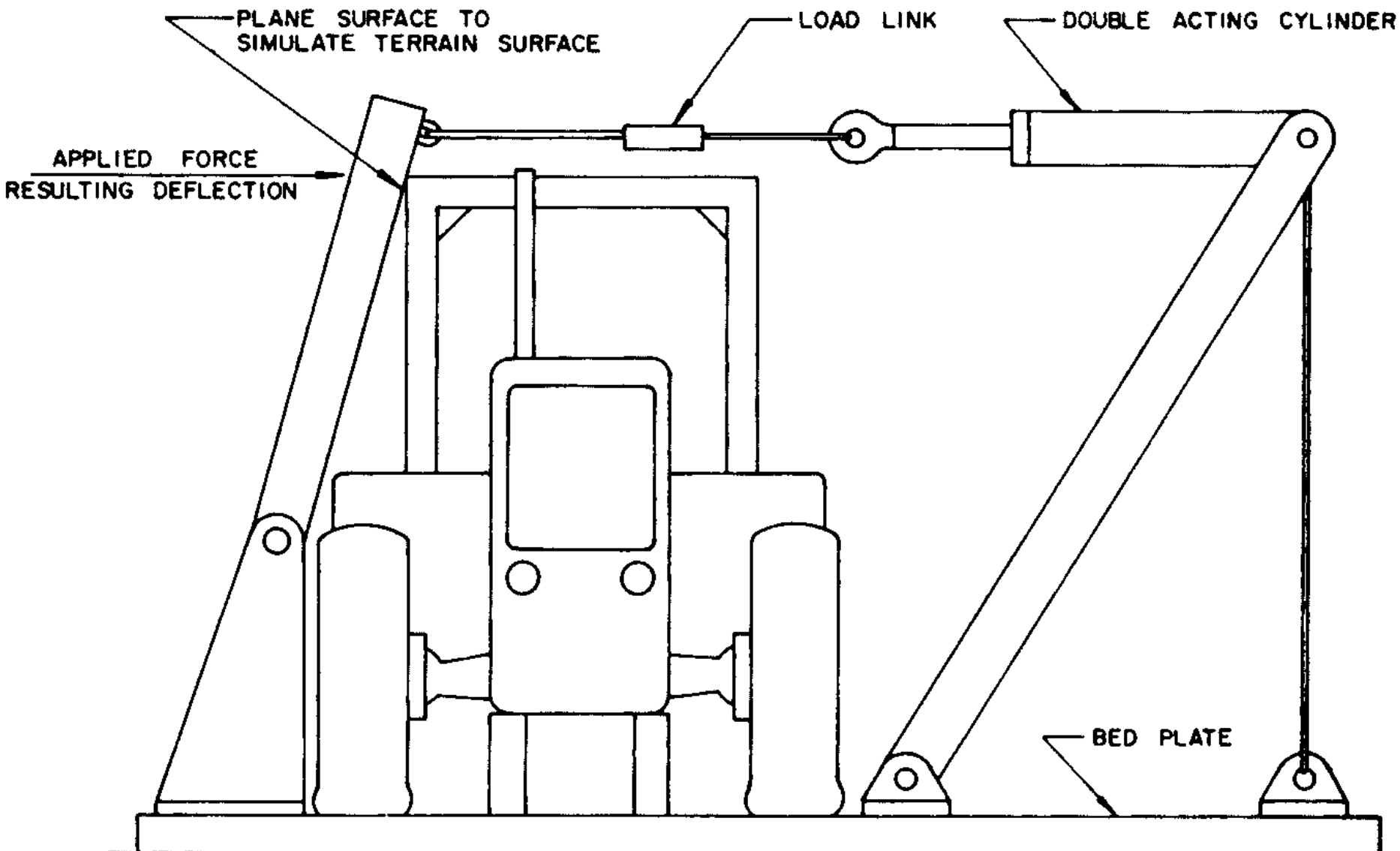

FIGURE W-3—Test setup for rubber-tired front-end loaders, rubber-tired dozers, and motor graders.