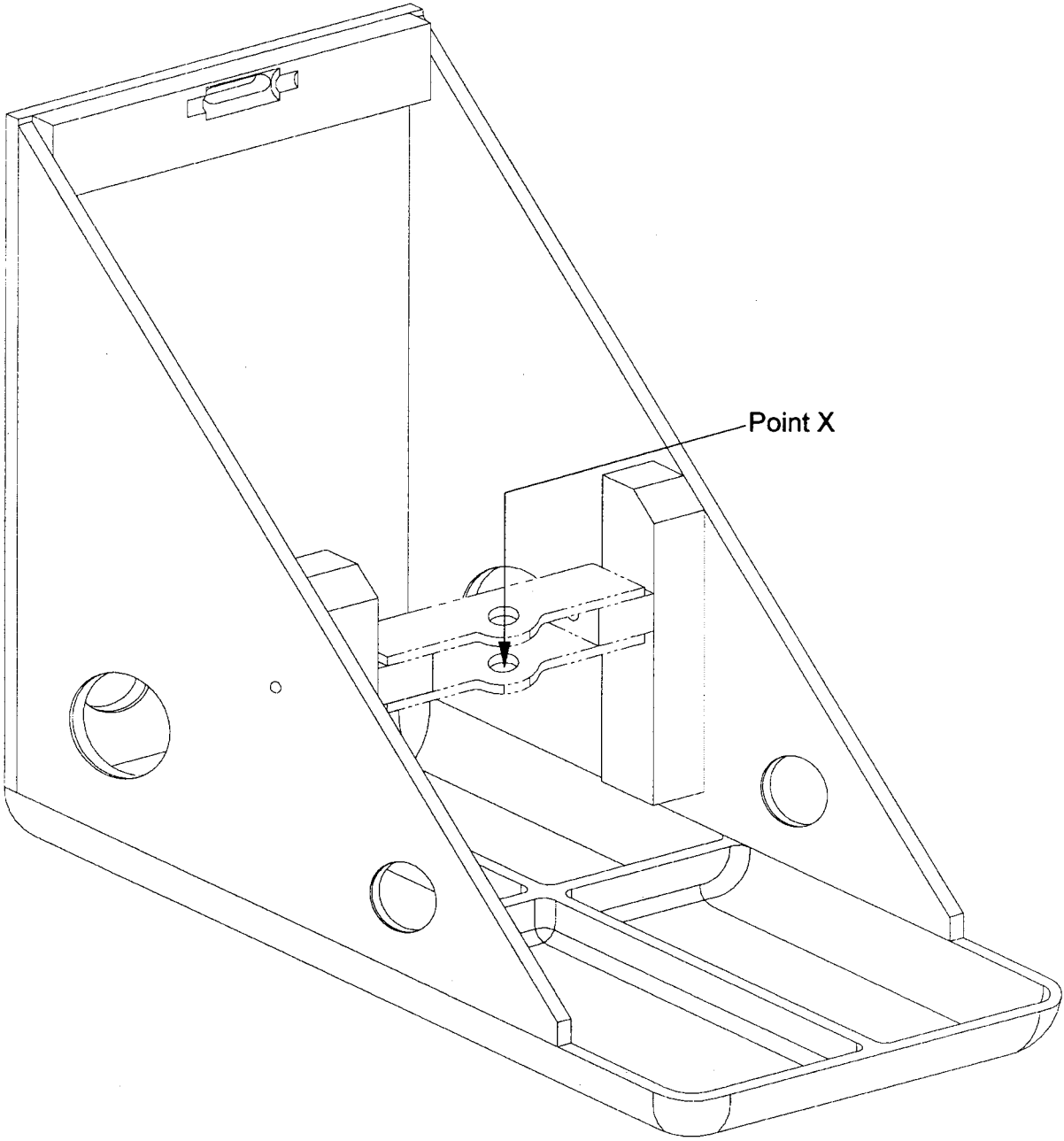

Figure 12 – Three Dimensional Schematic View of the Static Force Application Device 1 (SFAD 1)