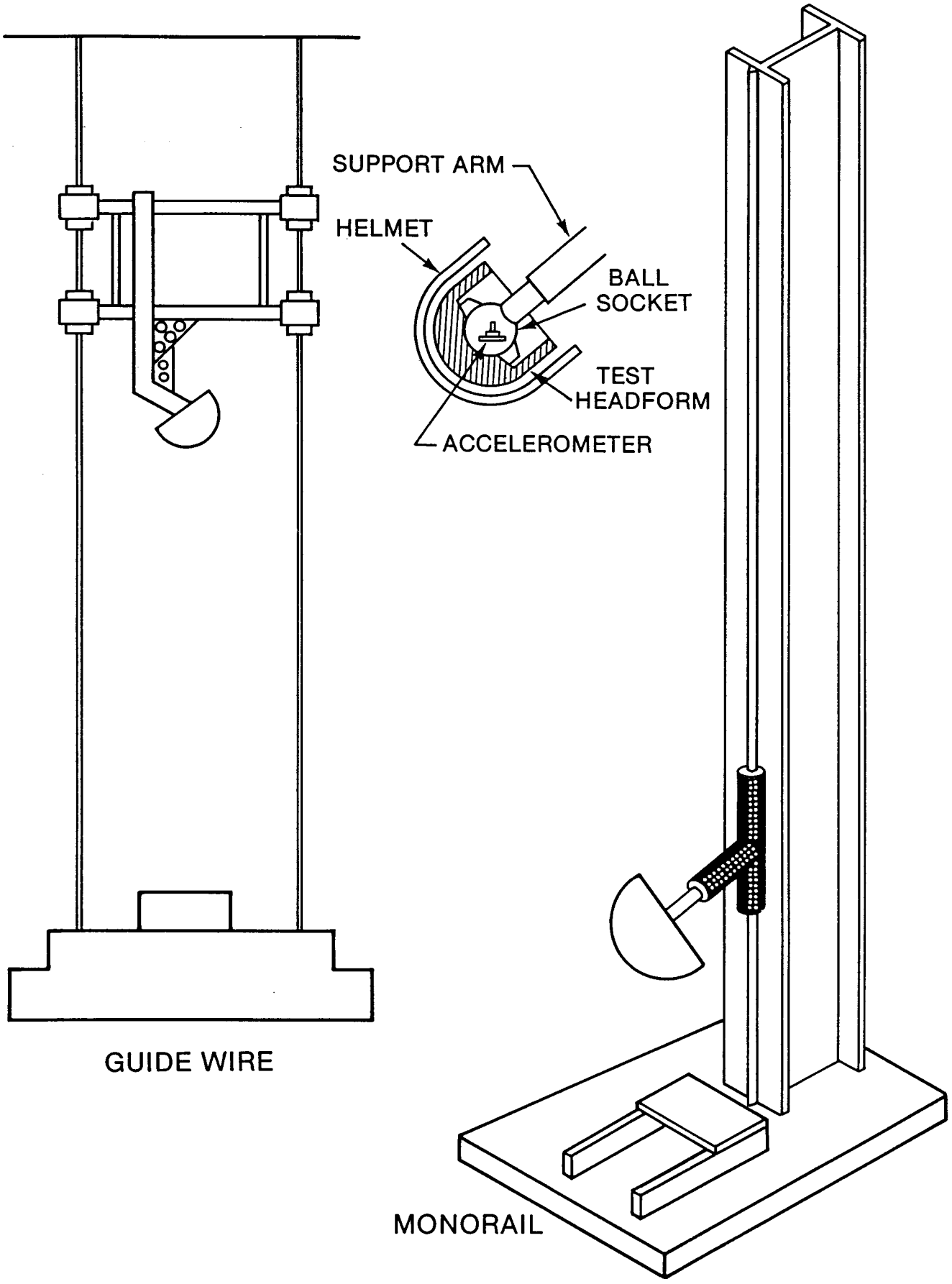

Figure 9. Impact Test Apparatus