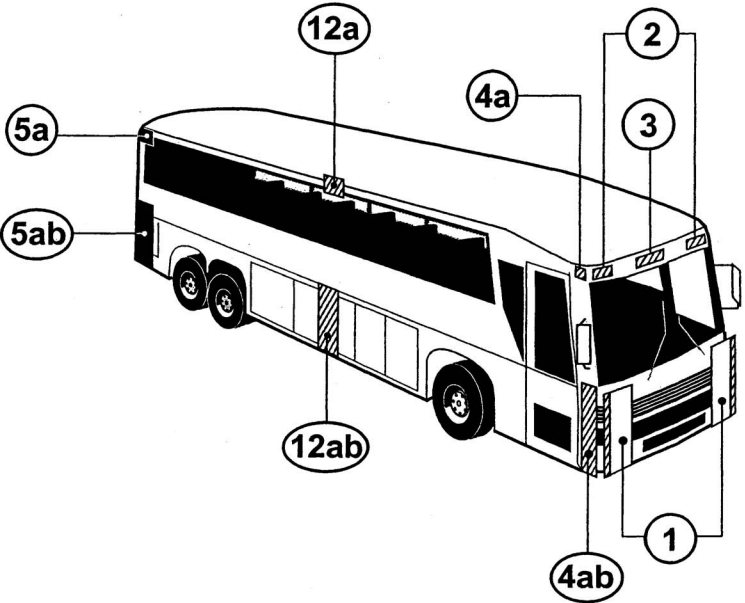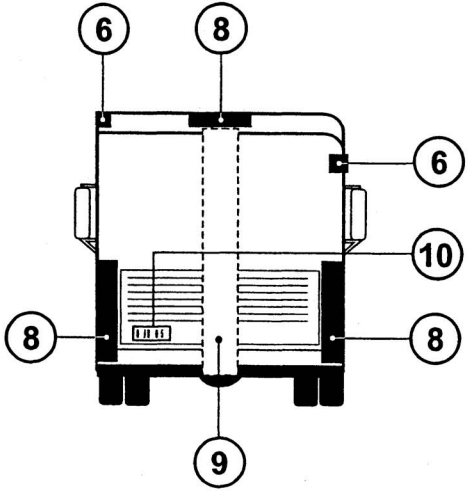Figure 7 - Bus Illustration for § 393.11