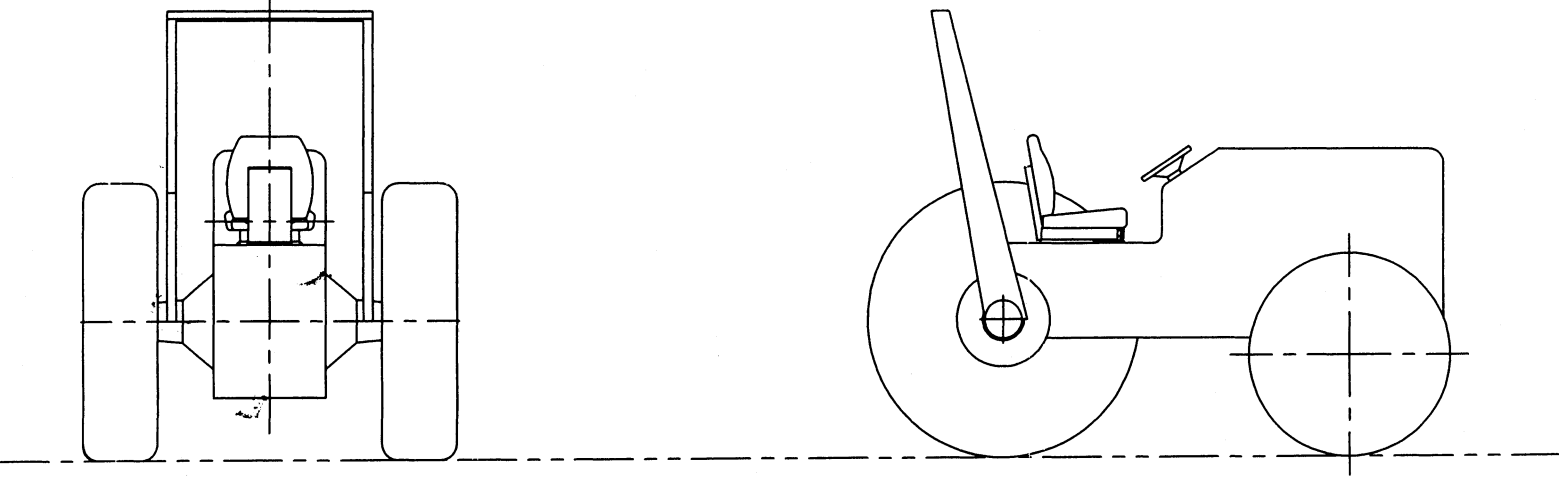

FIGURE W-14 - TYPICAL FRAME CONFIGURATION.