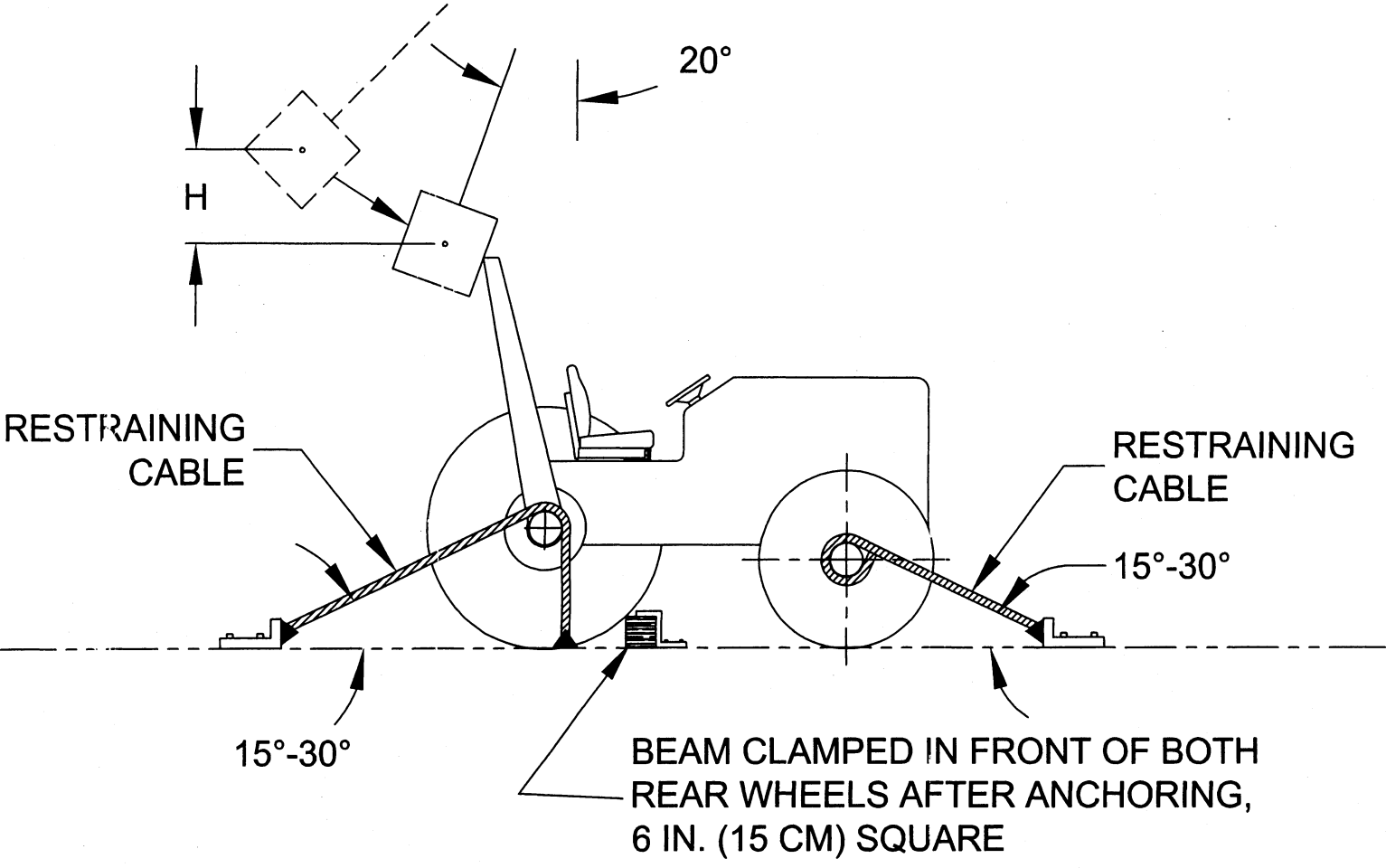

FIGURE W-22 - METHOD OF IMPACT FROM REAR.