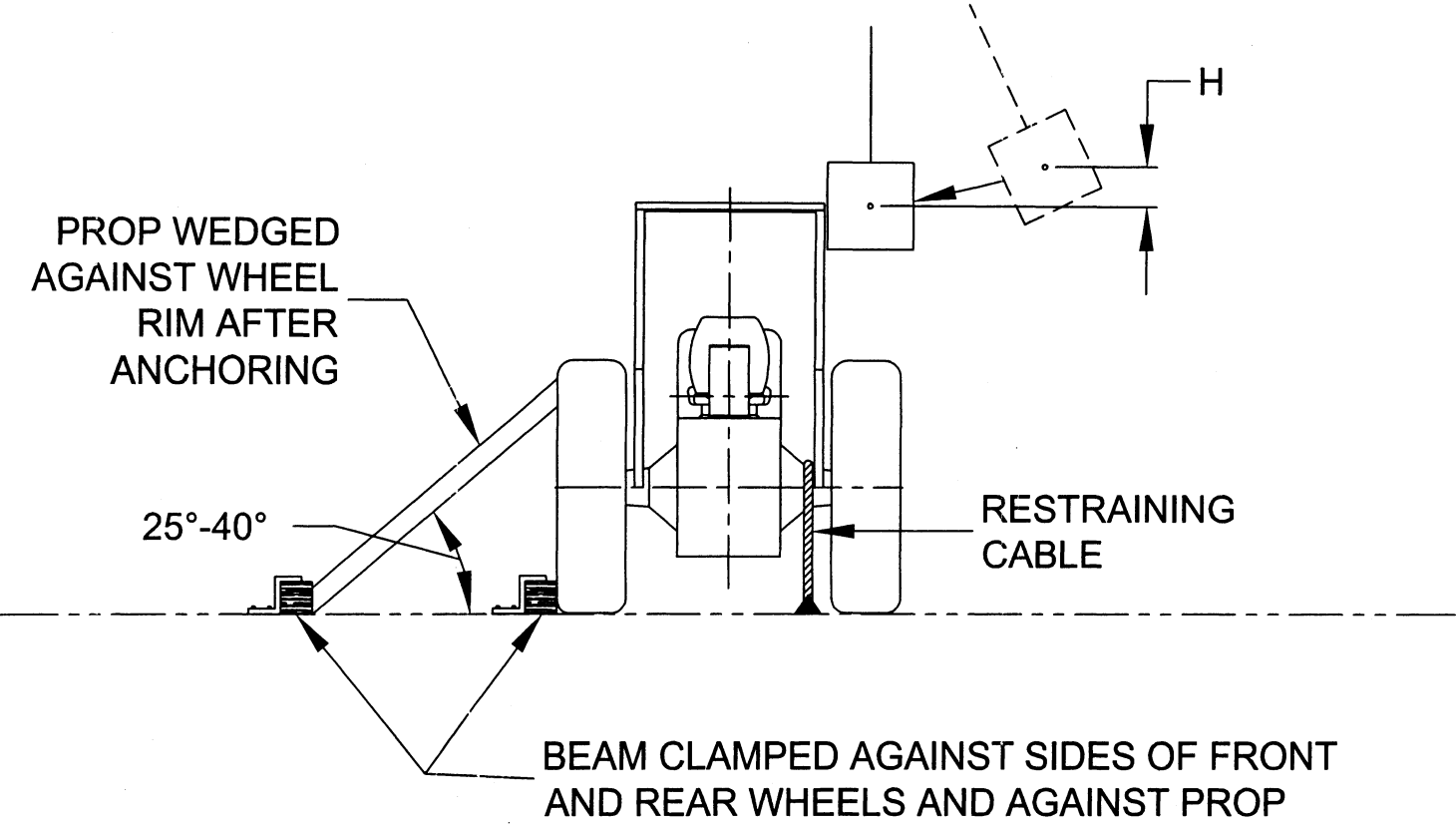

FIGURE W-23 - METHOD OF IMPACT FROM SIDE.