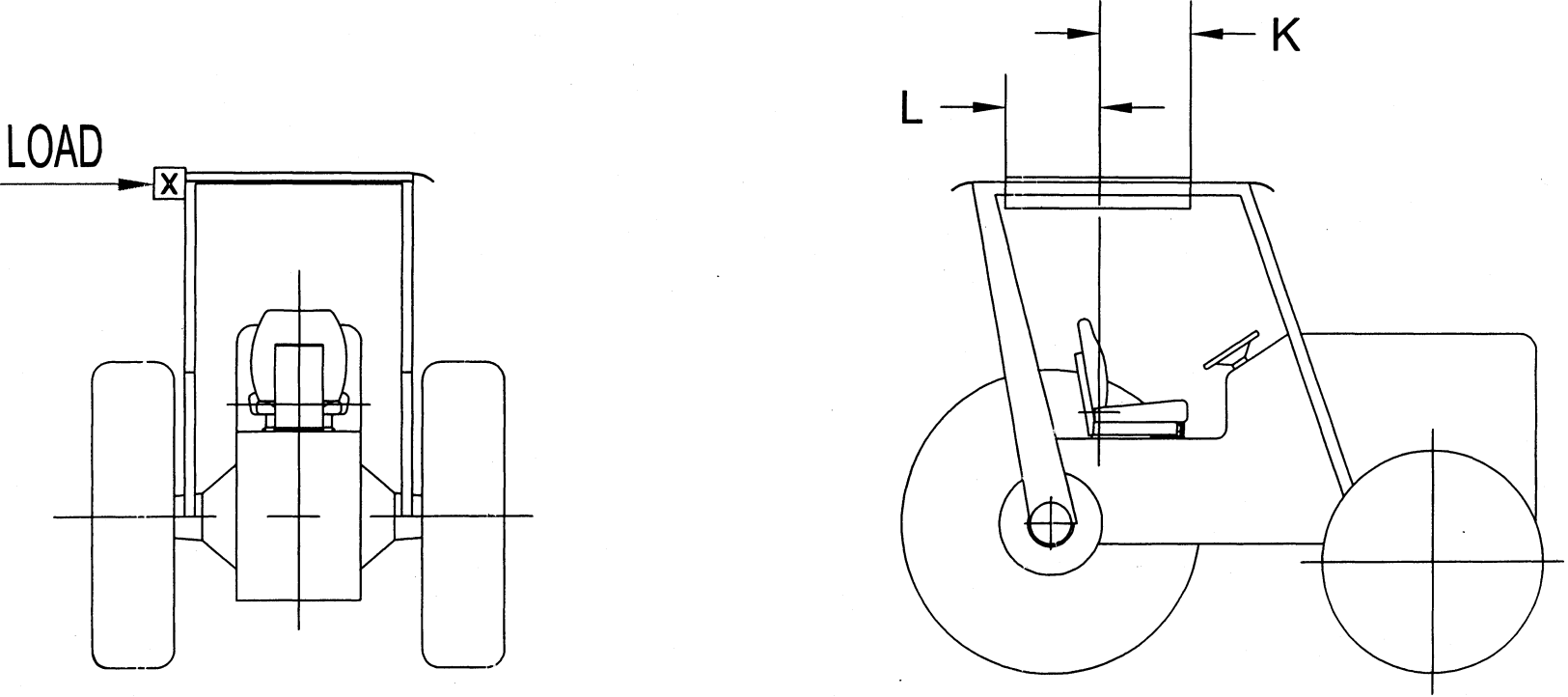

FIGURE W-25 - LOCATION OF SIDE LOAD.