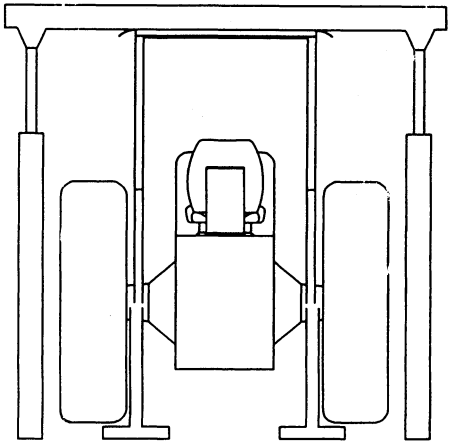

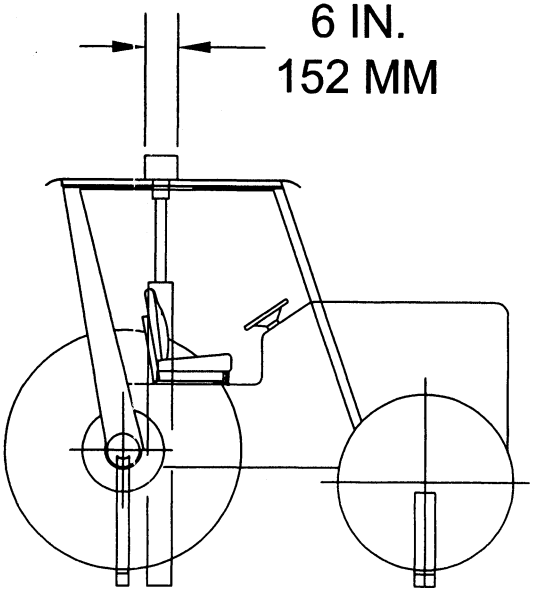

FIGURE W-27 - METHOD OF LOAD APPLICATION FOR CRUSH TEST.