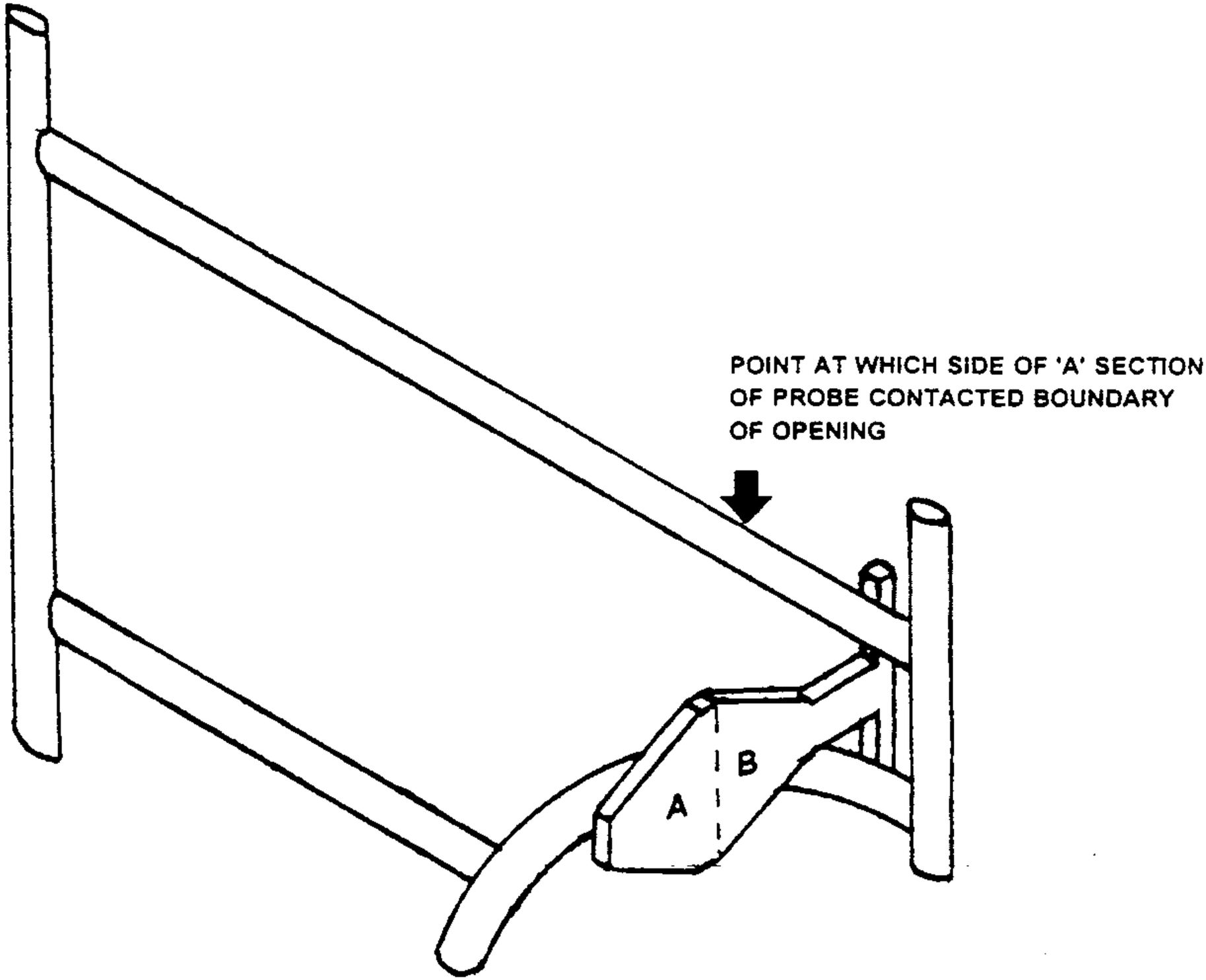

Fig 4 – Neck Portion of "B" Section of Probe Enters Completely into Opening