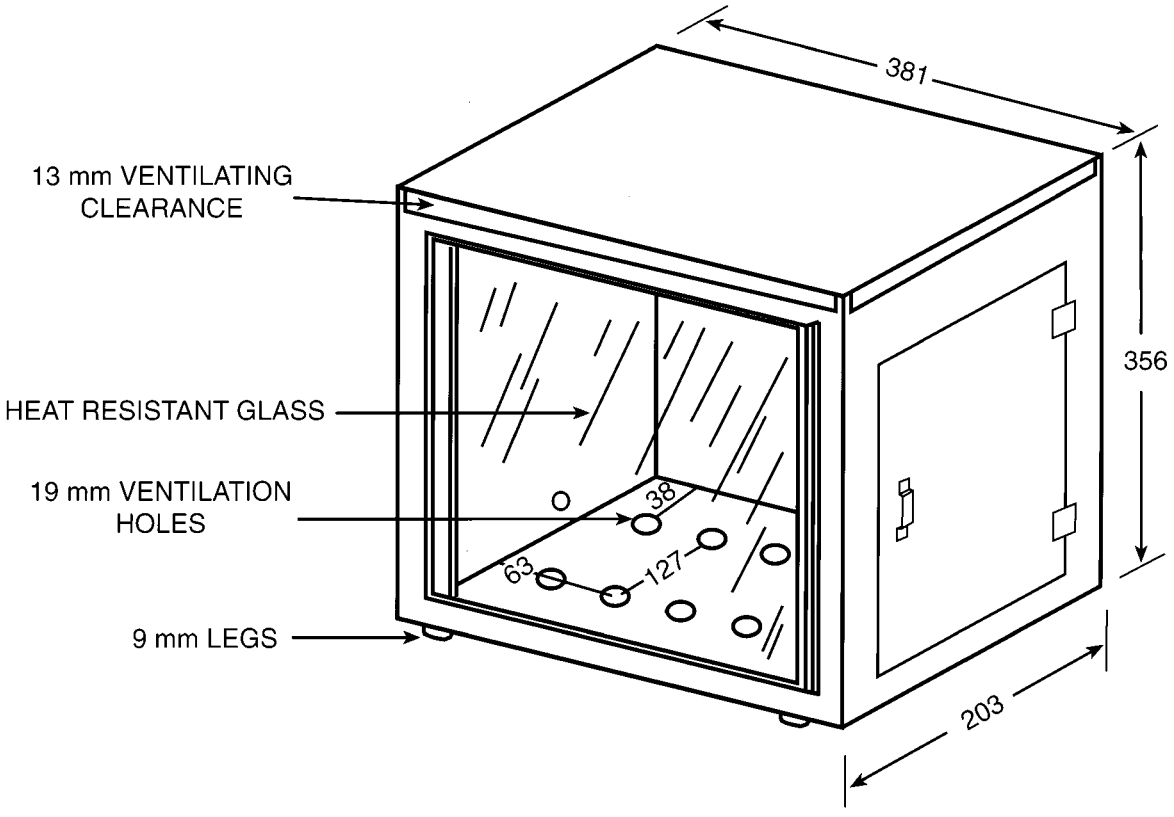

Figure 1
All dimensions in millimeters (mm)