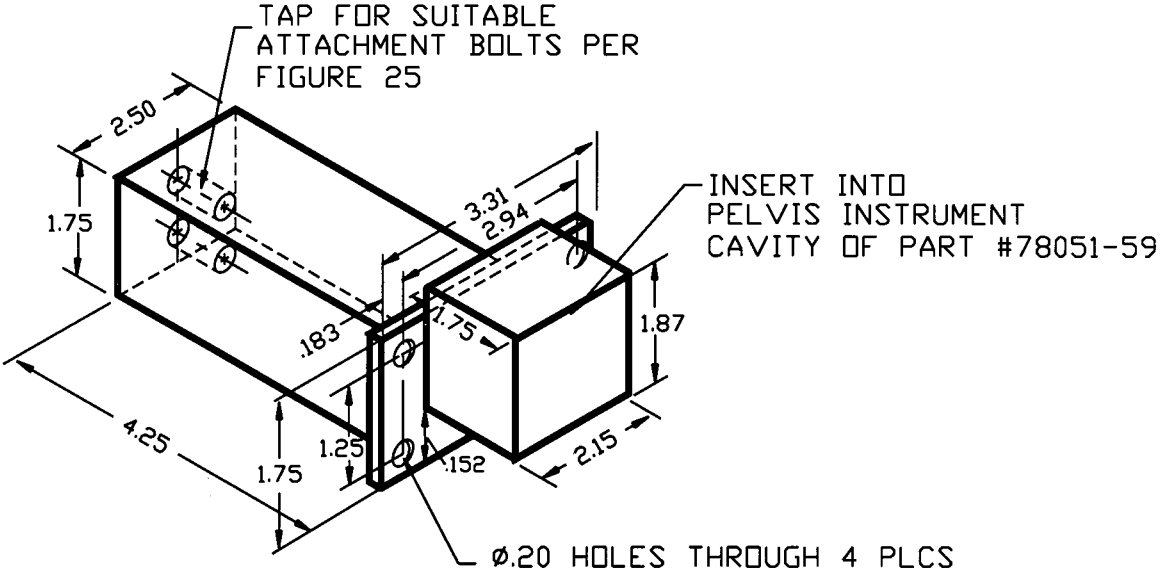

(REF NOTE): HOLE LOCATIONS MATCHING
INSTRUMENT CAVITY COVER #78051-13

* ALL DIMENSIONS ARE IN INCHES

MATERIAL: Alum. or Steel

PELVIC BONE STABILIZER INSERT (REF)

Fig 25a