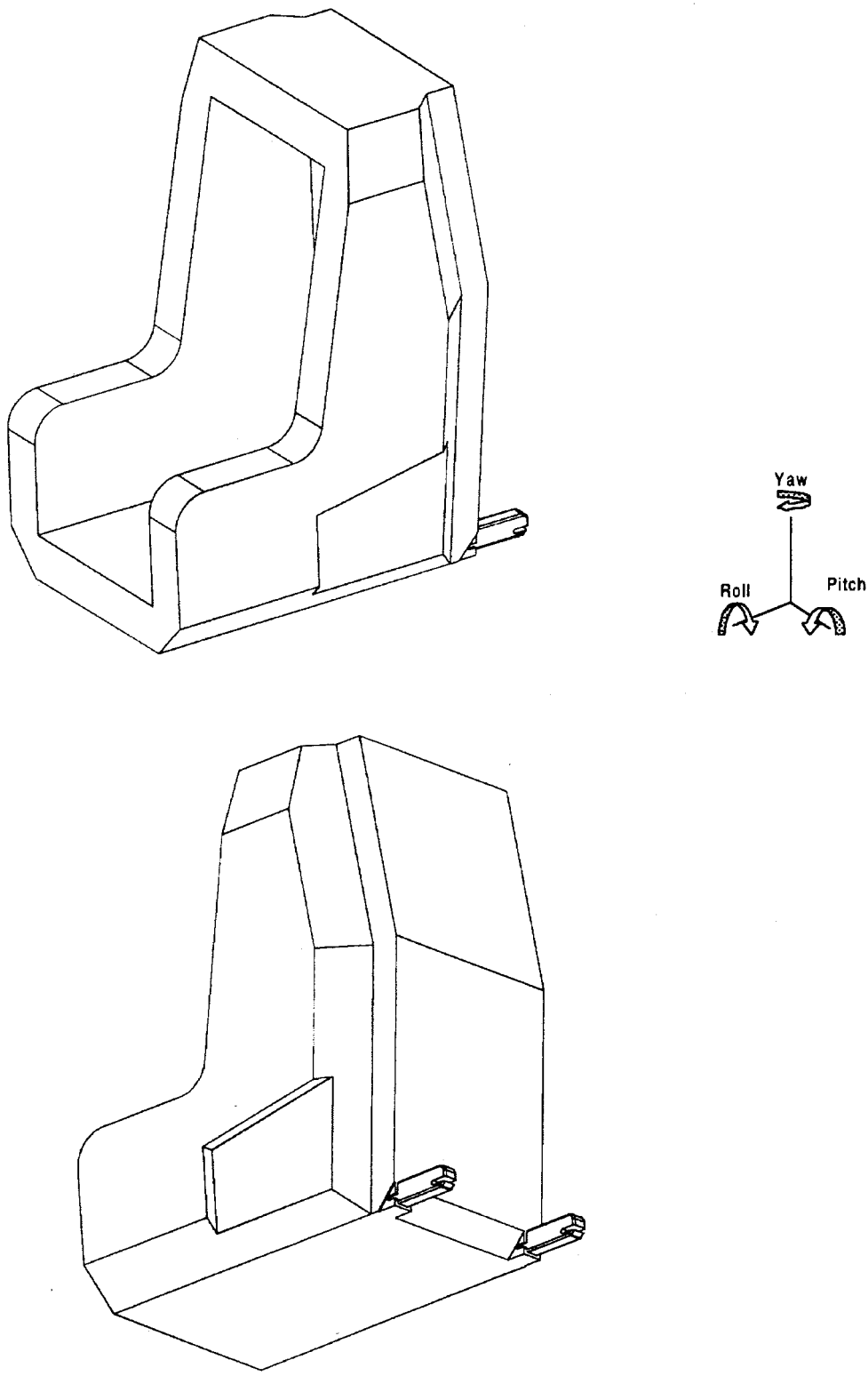

Figure 1 – Child restraint fixture (CRF)