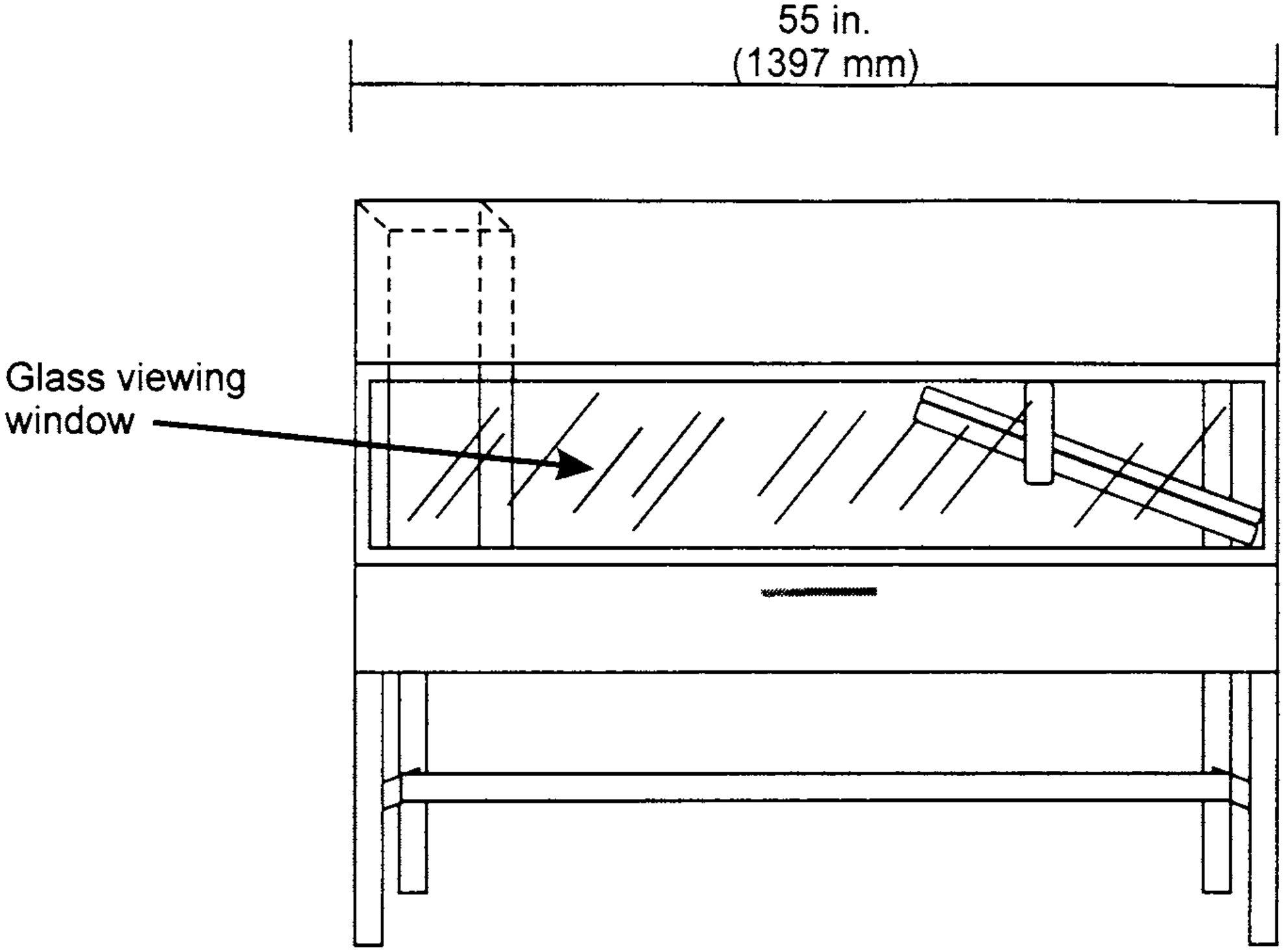

Figure 1 - Radiant Panel Test Chamber