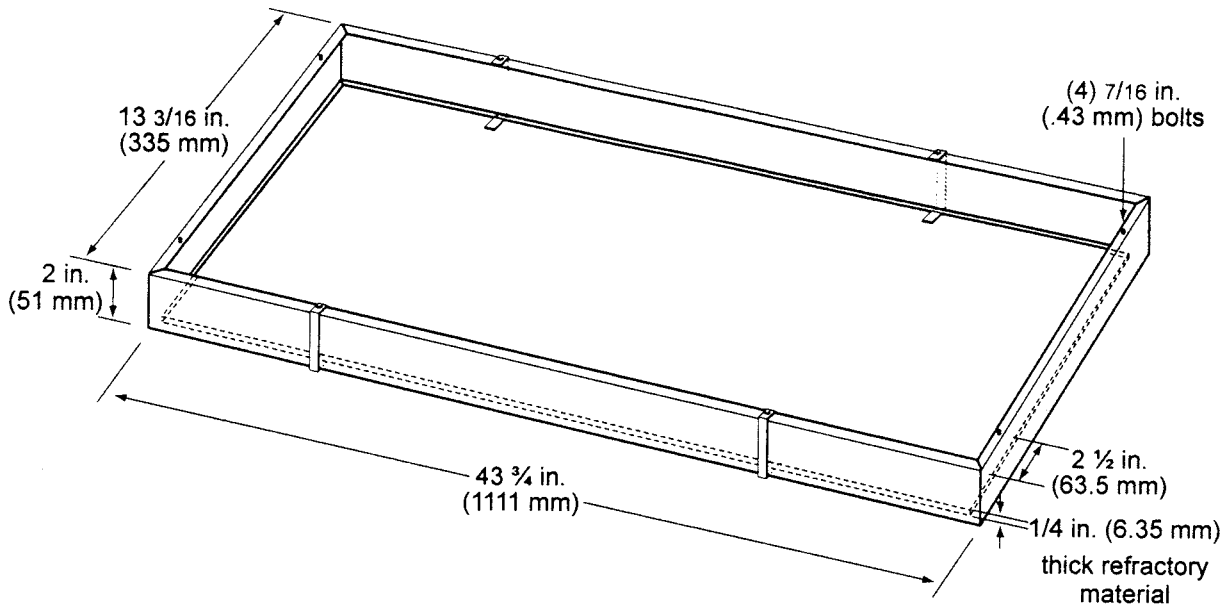

Figure 4 - Sliding Platform