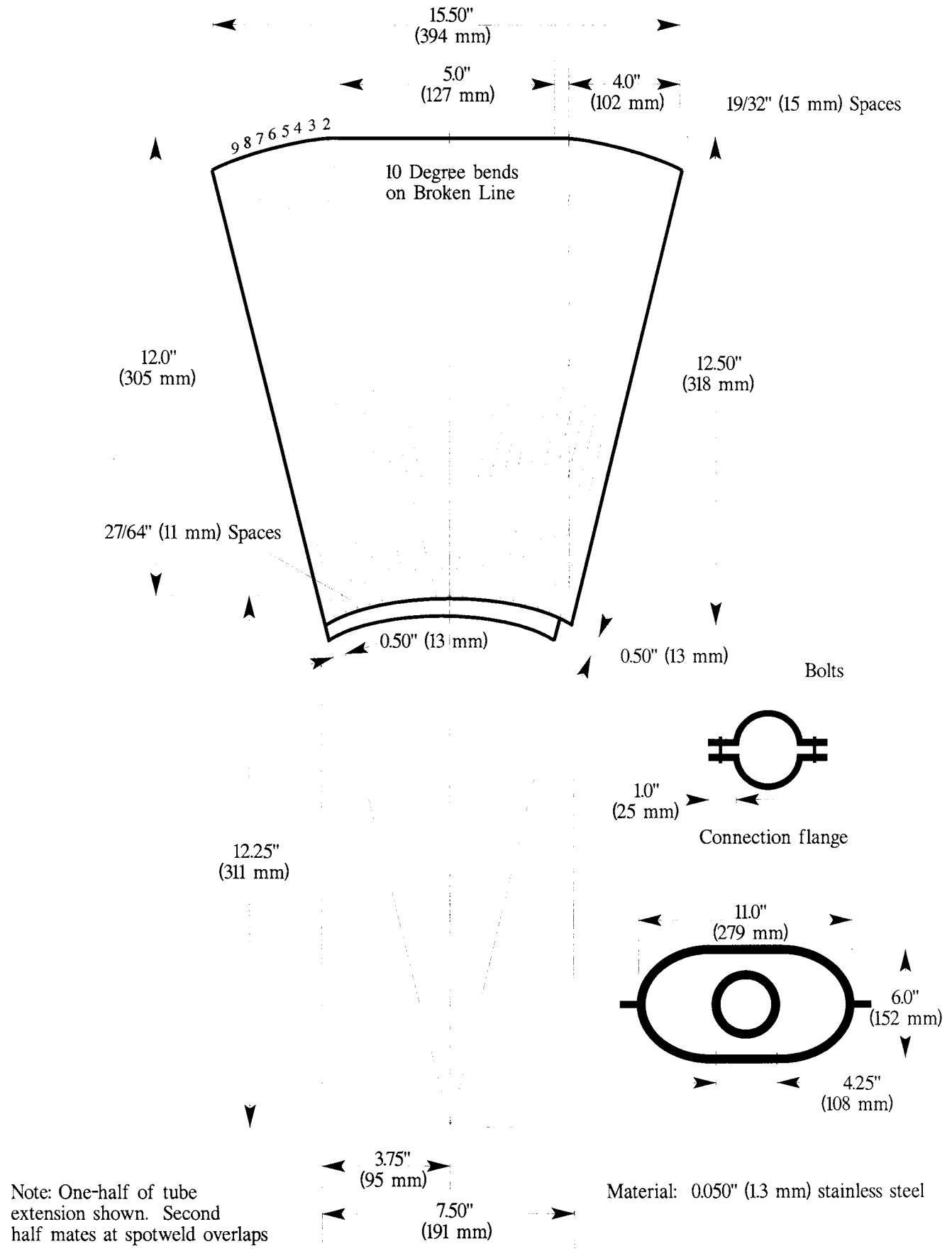

Figure 3 – Burner Draft Tube Extension Cone Diagram